Vacuum Clamping Technology

Catalogue 2014E03

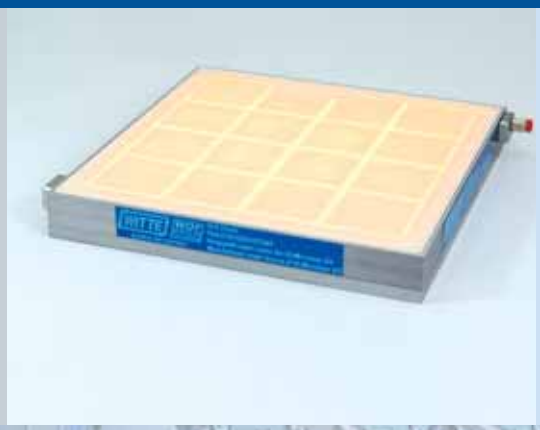

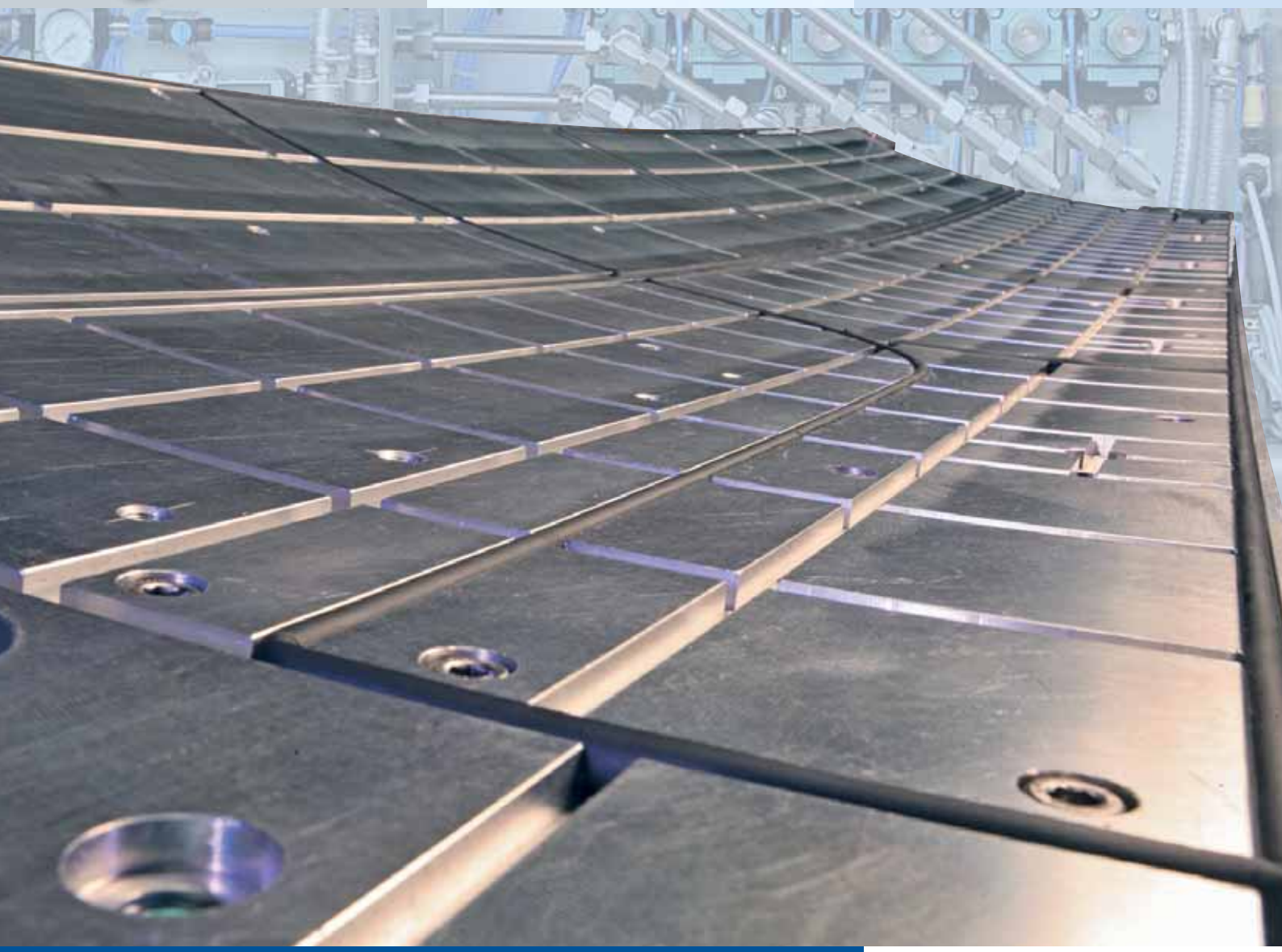

Innovative Clamping Systems

- Manufacturing and measuring technology
- New technologies
- Research and development

WITTE WOF WORLD OF FIXTURING

Witte Gerätebau

Witte was founded in 1969 and initially manufactured complex, high-precision parts for the aerospace industry. Today Witte has developed into a leading manufacturer of fixturing systems and gauges for all kinds of applications.
Almost all leading companies from automotive and aircraft industries now rely on Witte technology in order to maintain high quality in their production process.

Certification

Witte Gerätebau KG is certified acc. to
- DIN EN ISO 9001
- DIN EN ISO 9100
- QSF-A (Aerospace suppliers)

www.tuv.com TÜVRheinland ID:9105026589 TÜVRheinland® CERT ISO 9001 EN 9100

ÖKOPROFIT® LANDKREIS LÜNEBURG 2011/2012

alu Multitalent mit vielen Vorteilen

Introduction 2
- Business activities, Vacuum clamping systems

Witte VAC-MAT™ 10
- Clamping system, Elements

Grid Chucks 16
- Modular chucks, Starter-Set

Slot Chucks 24
- Modular and standard chucks, Starter-Set

Microporous Chucks 34
- Metapor chucks, standard and special designs

Perforated grid chucks 44
- Custom built

Vilmill 46
- Fleece foil for perforated grid chucks

FLIP-POD™ Vacuum system 48
- Elements, sets

Vacuum chucks for 3D parts 56
- Examples

Vakuum systems 58
- for measuring processes

Vacuum supply 64
- Pumps, Units, Workstations

Liquid separators 78
- Manual, automatic

Vacuum Starter Sets 80
- Universal, Grid and Slot

Accessories, Replacements 84
- Mats, seals, hose, filters, valves etc.

Metapor 96
- Porous aluminium

Ice Vice 102
- Freeze clamp technology

Witte Weiguss 104
- Mould clamping technology

Customized clamping solutions 106
- Examples

Index 113

Business activities of Witte Gerätebau Barskamp KG

Why should you choose Witte Vacuum Systems?

Deciding on Witte systems solutions is a decision for the future and reduces investment for every further project for pumps and fixtures.

Established and proven in many different applications and industries

Full coverage for clamping suitable parts from 10mm² to 100mm²

All kinds of chuck surfaces
(T-slots, slots, macro and micro bores etc.)

Wide range of pumps and units available
(Venturi, vane pumps, compressors)

From short term delivery catalogue items to semi-standards to complex individual custom-built clamping systems

Continuous new and further developments

No matter what demand and individual application you have, Witte offers you the correct technical and cost-effective solution.

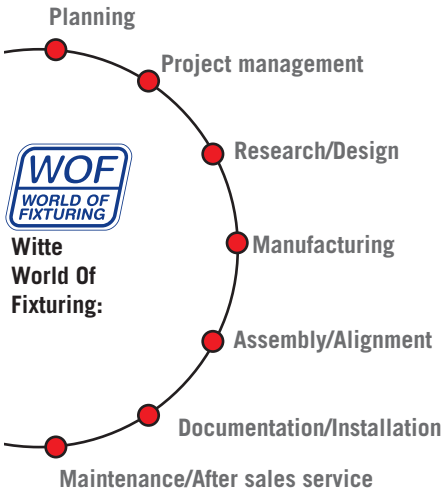

- As everything is done under one roof, time consuming interfaces and inevitable cost arising from overlapping are dispensed with.
- International sales and service network through own subsidiaries and regional solution partners.
- Experienced project teams with sound knowledge in almost all standards of the automotive industry and their related partners.

www - Witte wordwide

We meet the challenges of our customers wherever they occur. Our sales and service network guarantees support worldwide. Witte companies and subsidiaries in Singapore, Mexico and USA as well as long term partners in all major industrial nations ensure the same high service level all over the World.

www - Witte worldwide:

www.horst-witte.de
www.alufix.de
www.witteasia.com
www.witteamerica.com

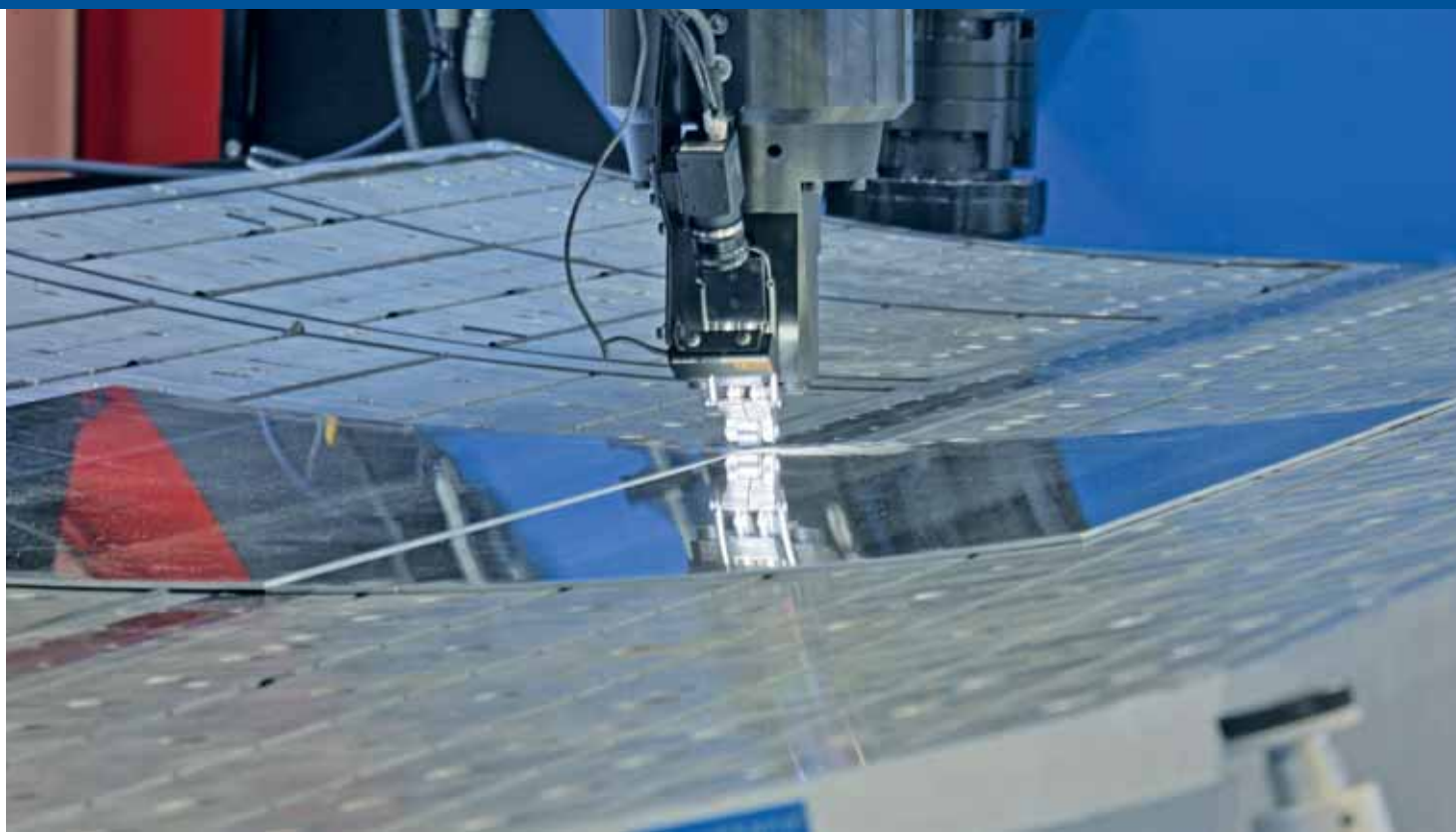

Vacuum clamping systems from Witte

- Machining (milling, turning, drilling, grinding)
- Engraving
- Polishing
- Deburring
- Coating
- Printing
- Irradiation
- Measuring (tactile, optical)
- Testing, simulating
- Moving and positioning
- Friction-stir welding
- Laser welding processes
- Visual analysis

Vacuum supply for Witte vacuum clamping systems is created using either oil lubricated rotary vane pumps or the proven liquid ring pumps. There are more than 27 variations and sizes available as pumps or units. Venturi valves are obtainable.On turning machines vacuum is catered for via rotating joints directly through the hollow spindle of the machine.Vacuum clamping systems with integrated pumps, tanks, energy modules can be operated completely independently and free from any external supply lines.Complex vacuum fixtures can be equipped with mechanical, pneumatic, hydraulic or electrical clamping, positioning and /or handling units.

System solutions in detail

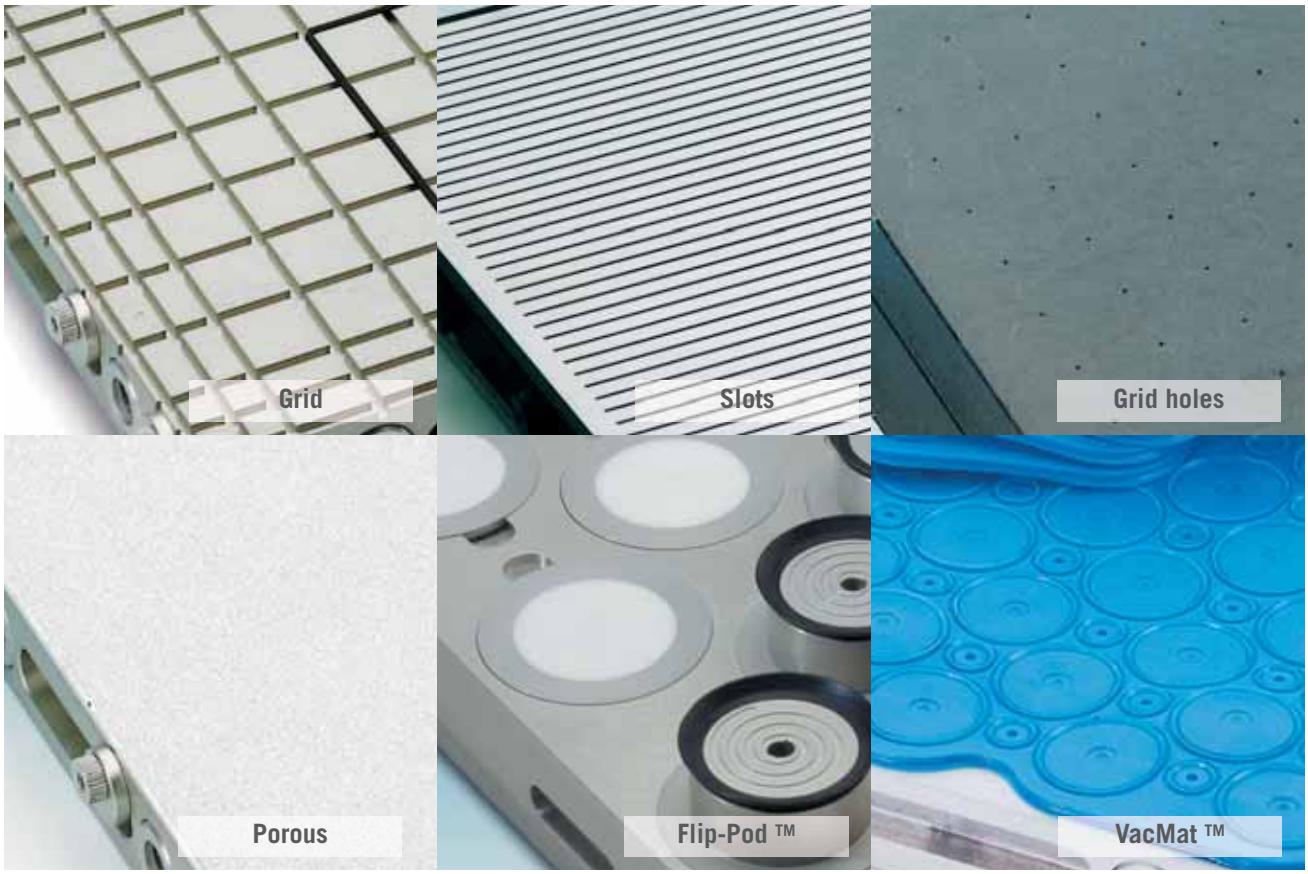

Possible material of vacuum chucks

- Steel*
- Aluminium
- Plastic*
- Ceramic*
- Sinterbronze

*) Available only on request

Chuck types

- Grid chuck
- Slot chuck
- Grid hole chuck
- Vac-Mat chuck
- Microporous chuck
- Macroporous chuck
- Flip-Pod chuck
- Grid slot chuck
- Heatable clamping chucks
- Coolable clamping chucks
- Light transmitting clamping chucks

Rubber seal

Rubber adapter mat

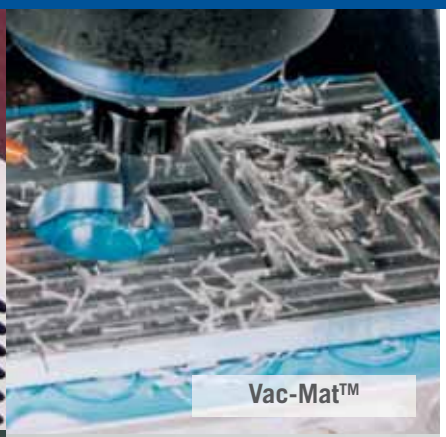
Vac-Mat™

Foil

Vilmill™

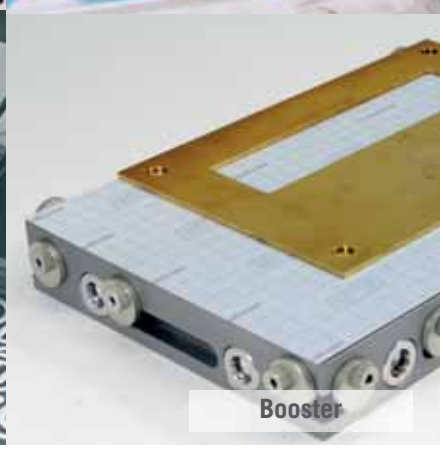
Booster

Replacement materials:

Rubber seal, rubber adapter mat, Vac-Mat™, Foil, Booster, Vilmill™

System complements

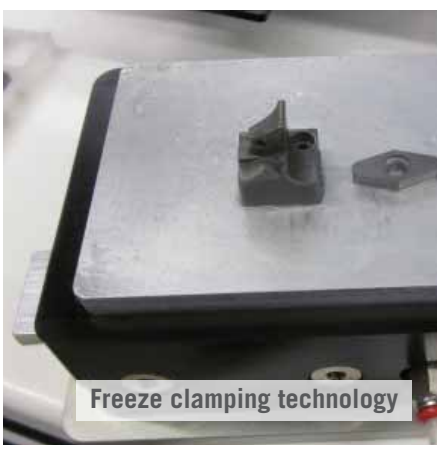
Freeze clamping technology

Witte IceVice freeze clamping technology:
Witte Weiguß mould clamping technologyIdeal for manufacturing of parts, which are almost impossible to clamp conventionally due to lack of suitable clamping surfaces.

Witte Weiguß mould clamping technology:
Ideal for manufacturing of parts, which are almost impossible to clamp conventionally due to lack of suitable clamping surfaces.

Mould clamping technology

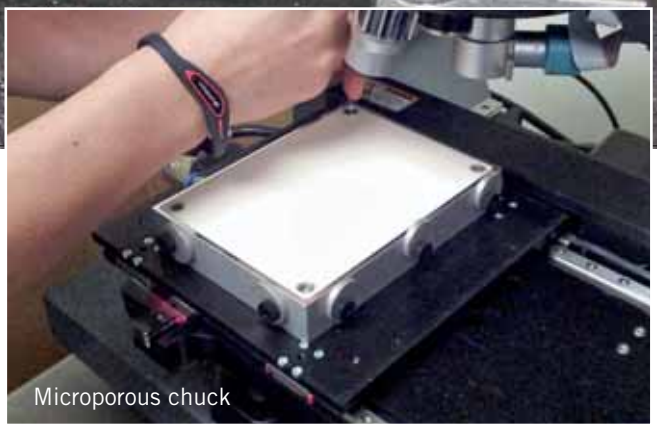
Microporous chuck

Vacuum chucks

Vac-Mat™

Flip-Pod™

Slot chuck

VAC-Mat™ Sets

Grid vacuum chuck

Slot vacuum chuck

Grid hole vacuum chuck

FLIP-POD™ vacuum-system

Microporous vacuum system

Clamping with vacuum

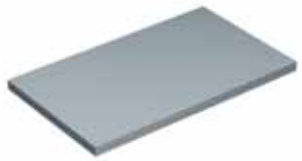

Square or rectangular part

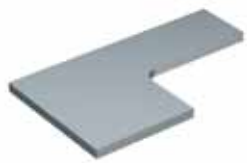

Part with cutout

Round parts

Slot chuck with perforated rubber adapter mat

Slot chuck with perforated rubber adapter mat

Slot chuck with perforated rubber adapter mat

Grid chuck with O-shaped seal

Grid chuck with O-shaped seal

Circular grid chuck

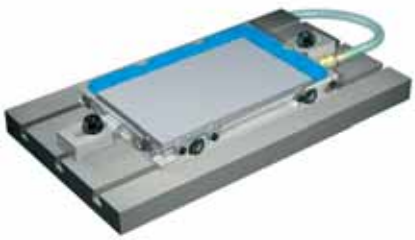

Witte VAC-MAT™

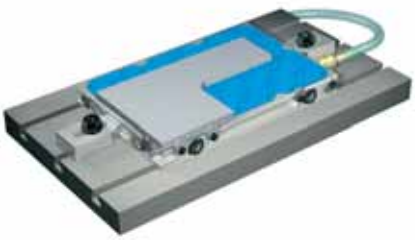

Witte VAC-MAT™

Chuck specially designed for workpieces

Setting up a vacuum system

Workpieces with small surfaces

Slot chuck with perforated rubber adapter mat

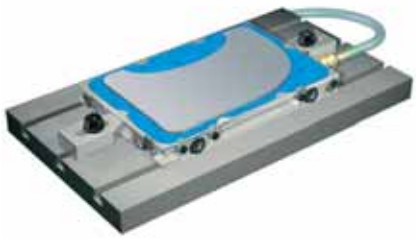

Witte VAC-MAT™

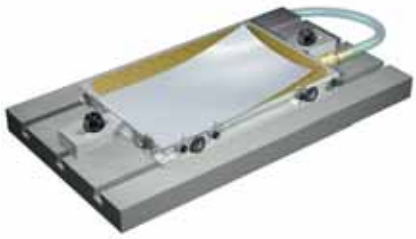

Chuck with insert made out of sintered metal or Witte Metapor© for foils and skins

Vacuum supply:
A modular vacuum unit with integrated liquid separator, storage tank and pressure control. Altogether almost 50 different variations of vacuum pumps and unit are available

Vacuum distributor, connection unit or safety appliance:
Distribution of operating vacuum to the chucks. Gauges, choice of manual or magnetic valves and pressure controls for watching over operating vacuum level.
All these variations are available.

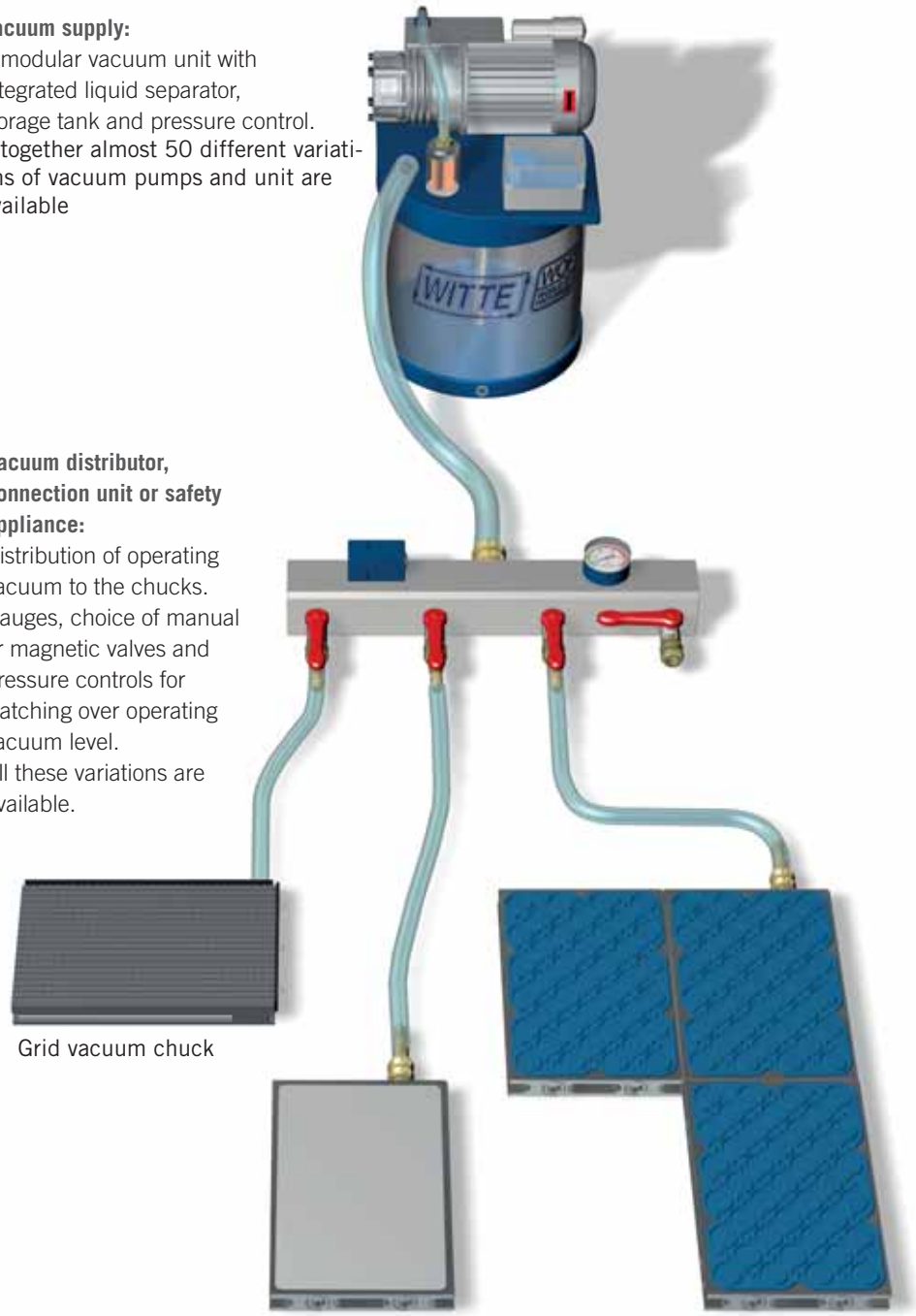

Grid vacuum chuck

Microporous vacuum system

VAC-Mat™ Chucks

Vacuum chucks:
Chucks to accomodate your requirements and clamping operations.

Vacuum supply from page 64

Witte VAC-MAT™

The vacuum system you can cut right into!

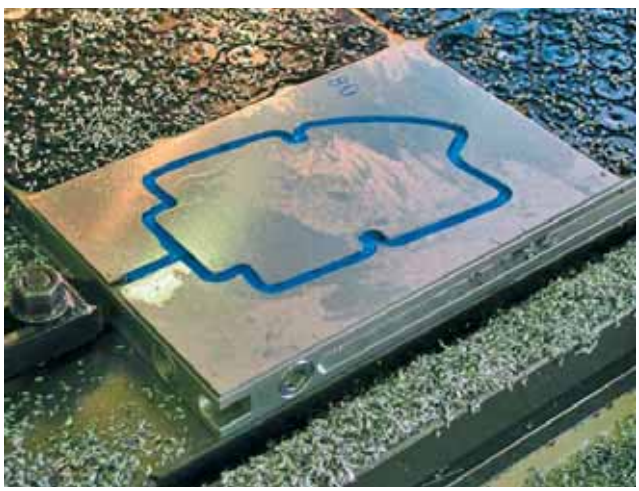

Application
Wide spectrum of different workpiece forms can be clamped
- Grinding
- Milling
- Drilling
- Five sided treatment including milling into the Vac-Mat

Advantages
- Strong hold down force
- Clamping surface with a high friction value
- Milling through of outer and inner contours
- Precise and exact cut outs due to the fact that the workpiece can be milled through into the VacMat leaving a clean cut edge

Handling
- Set up time reduced to seconds as fitting of single rubber seals become obsolete
- Surface friendly material which avoids scratching of workpiece surface area
- No extra clamping fixture needed

further information on VAC-MAT™ are on You Tube channel under
http://www.youtube.com/user/WitteGeraetebau

Witte VAC-MAT™ Application

What is VAC-MAT™ ?
It is a thin soft polymer mat with many spaced out vacuum points, suckers in different sizes with a fine hole in each centre and a raised lip. On the underside there are six lugs which locate in the special VAC-MAT™ chuck. On the mat under surface there are grid shaped grooves which distribute the vacuum to each of the small holes. A lip right around the outside edge ensures no leakage.

What size is VAC-MAT™?
All VAC-MAT™s are 2,5 x 200 x 300 mm. The tolerance lies at +/- 0,04mm and concave upto 0,1mm. To increase the size of the working area, the modular VAC-MAT™ chucks are connected to one another and VAC-MAT™ s are simply placed on as described.

Is VAC-MAT™ reusable?
The working life of a VAC-MAT™ depends on the number and size of cuts made into the mat during machining.

Operating temperature for VAC-MAT™
Vac-Mat™, available in RED, BLUE and GREEN versions can be used at 40°C without any limitations

The lugs underneath the mat guarantee fast and accurate positioning of the VAC-MAT™ on the special modular vacuum chuck

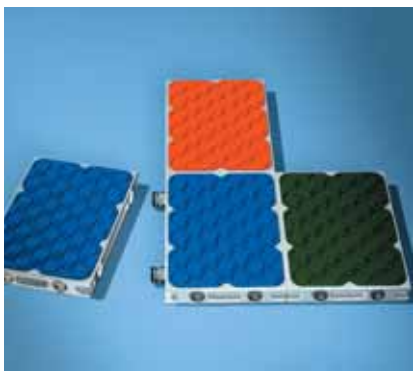

The modular concept allows connection of several vacuum chucks. The vacuum supply to each chuck continues through the connection elements.

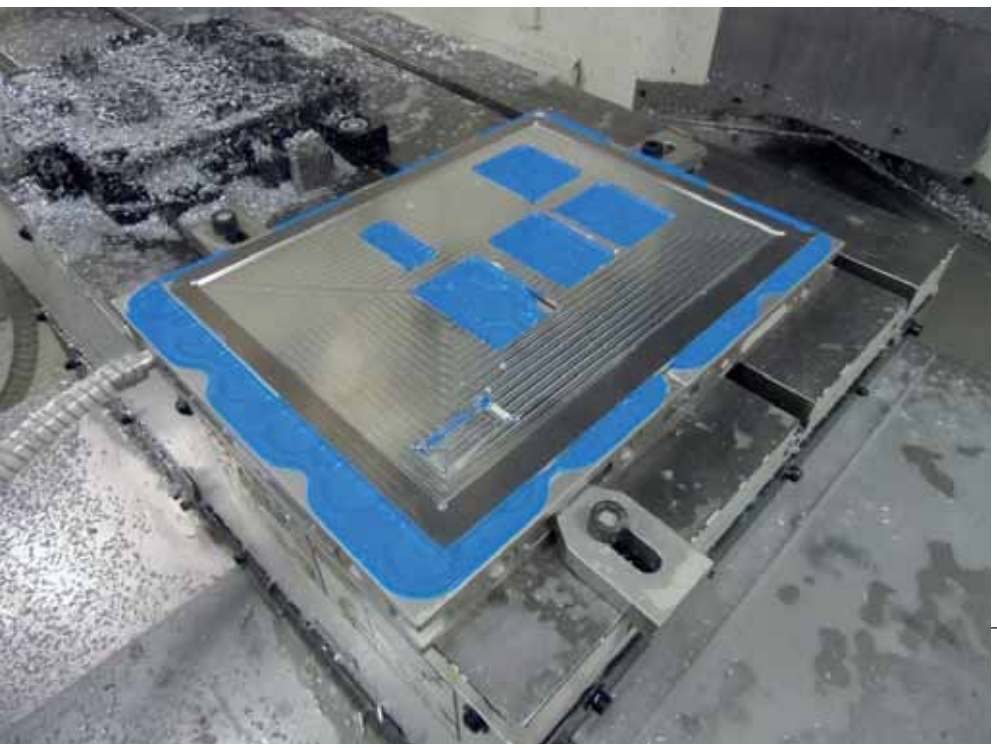

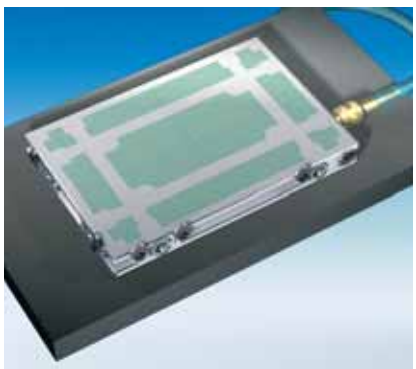

In modular chucks additional holes can be drilled in the green areas to allow insertion of pins for positioning. Further information on page 114.

VAC-MAT™ Starter Set
single, 6,4kg

Nr.	Pcs	Name
81759	1	Modul chuck 300x200

Supply includes:
- 10 VAC-MAT/blue
- Vacuum chuck adapter plate
- Vacuum suction hose 1m incl. connector
- 2 clamps for mounting chuck
- Assembly tool

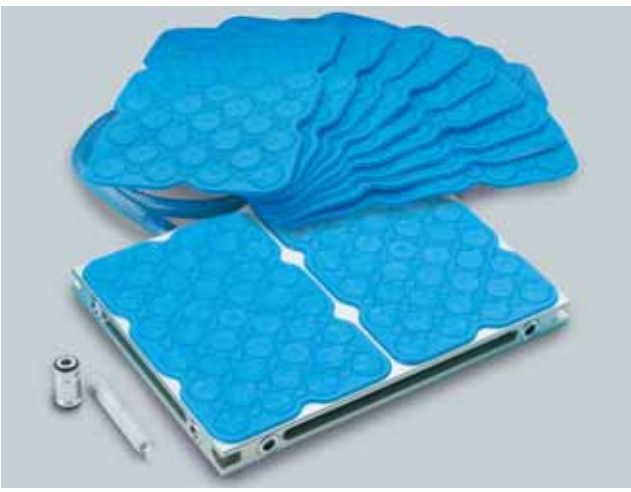

82837 VAC-MAT™ Starter Set
double, 10,8kg

Nr.	Pcs	Name
82837	1	Modular chuck 300x400

Supply includes:
- 10 VAC-MAT/blue
- Vacuum chuck adapter plate
- Vacuum suction hose 1m incl. connector
- 2 clamps for mounting chuck
- Assembly tool

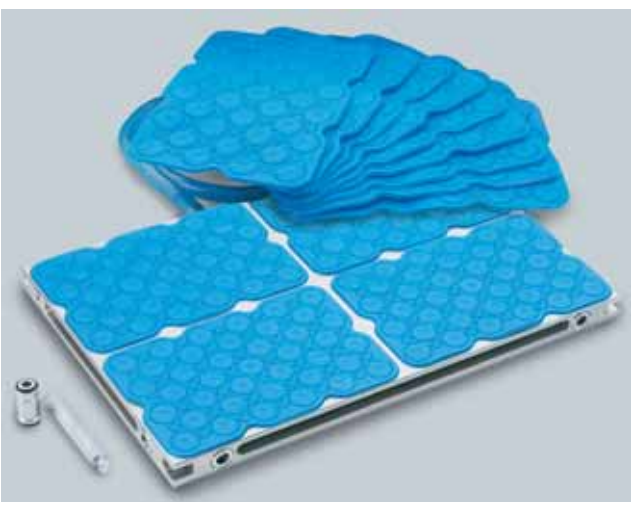

82825 VAC-MAT™ Starter Set
four times, 20kg

Nr.	Pcs	Name
82825	1	Modular chuck 600x400

Supply includes:
- 10 VAC-MAT/blue
- Vacuum chuck adapter plate
- Vacuum suction hose 1m incl. connector
- 2 clamps for mounting chuck
- Assembly tool

Other dimensions on request.
Dedicated chucks are also available but Vac-Mats™ are 200x300 mm, any larger surface area must be a multiple of 200x300 mm.

Thin workpieces can also be clamped and machined securely but gently using VAC-MAT™

Machine table (3,3x11 meters) supplied with VAC-MAT™ Vacuum clamping. The photo shows the fixture at a aircraft manufacturer, where pockets are milled into a surface area covered with 468 Mats.

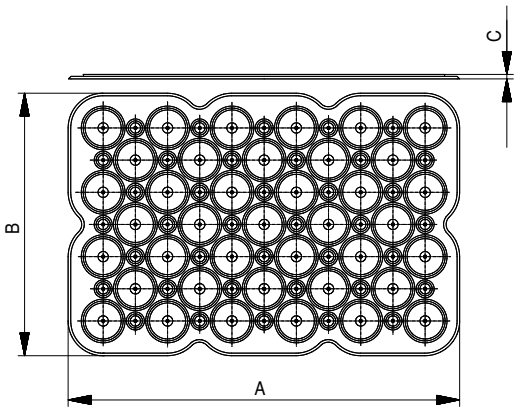

Witte VAC-MAT™

in different versions

Nr.	Color	A	B	C	g
11030	**blue**, normal machining	300	200	2,5	102
11053	**green**, heavier machining	300	200	2,5	102
11548	**red**, only used once	300	200	2,5	102
11029	**black**, for covering areas not required during machining	300	200	2,5	102

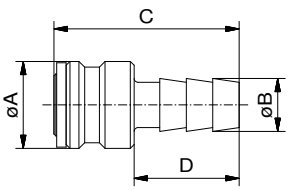

Hose connector

incl. O-Ring

Nr.	A	B	C	D	for hose ø	g
81761	23	14	49	31	ø18/12	20

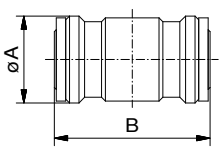

Vacuum chuck adapter

incl. O-Ring

Nr.	A	B	g
81762	23	41,6	32

Plug
incl. O-Ring

Nr.	A	B	g
81774	22,3	20,7	18

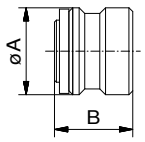

Sealing

Nr.	A	B	g
34798	16	2,5	1

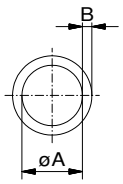

Tool for setting up

Nr.	A	B	g
28331	15	120	60

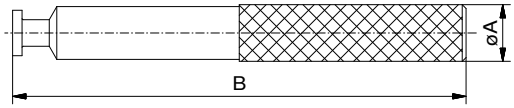

Height adjustable end stops
in form of excentric washers:

Nr.	for height of plate	A	B	C	D	Pcs	g
85405	32,5	20	M5	9	16	6	38
85409	38,0	27	M6	11	20	9	90
85410	48,0	30	M6	12	20	12	132

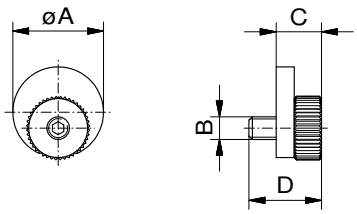

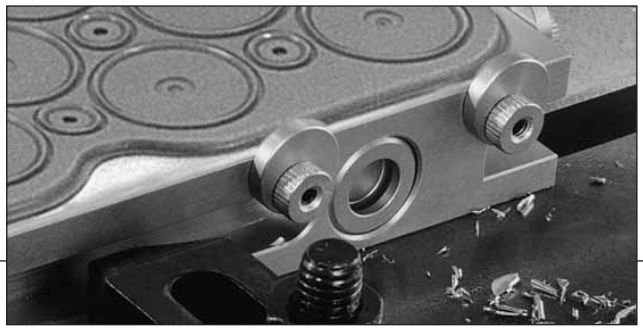

For fixing end stops, threaded holes have to be drilled into the plate by the customer.

Custom built tombstone
with integrated storage tank,
magnetic Valve and 6 pc grid type chucks.

Grid chucks

Modular version
Standard sizes
Special design

Applications
For simple shaped workpieces
with a rough surface and heavy duty milling
- Grinding
- Milling
- Turning

Advantages
- Strong hold down force
- For universal applications
- Secure clamping of rough workpiece surfaces due to high friction properties
- The O-shaped seal evens out any irregularities between workpiece and chuck surface

Handling
- Any shape or size of chuck made to measure
- Recommended grid size depends on workpiece contour and dimensions
- Clamping area defined by O-shaped seal
- Finely gridded vacuum chucks for extremely small parts
- Ideal as a base for many solutions together with special vacuum adapter plates

Vacuum fixture with cylindrical geometry for clamping aircraft fuselage segments (#94651)

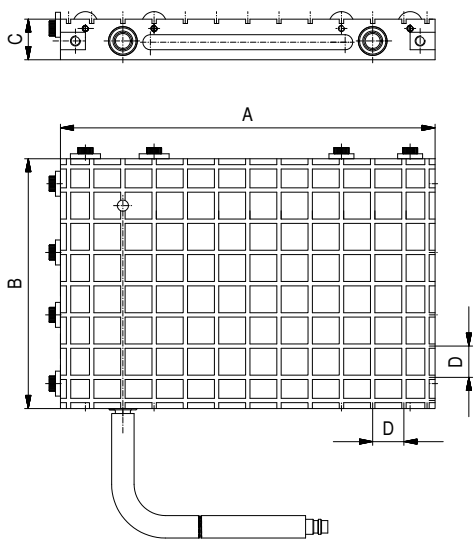

Grid chucks

modular type

Nr.	A	B	C	D	
82978	300	200	32,5	25	5,3
84161	400	300	32,5	25	10,2
84162	600	400	32,5	25	20
89676	300	200	32,5	12,5	5,6
90249	400	300	32,5	12,5	10
92289	600	400	32,5	12,5	20

Supply includes:

- Modular chuck
- 10m O-shaped seal, ø 4 mm
- Vacuum adapter plate
- 1m wire spiral hose
- 2 clamps for mounting chuck
- Assembly tool

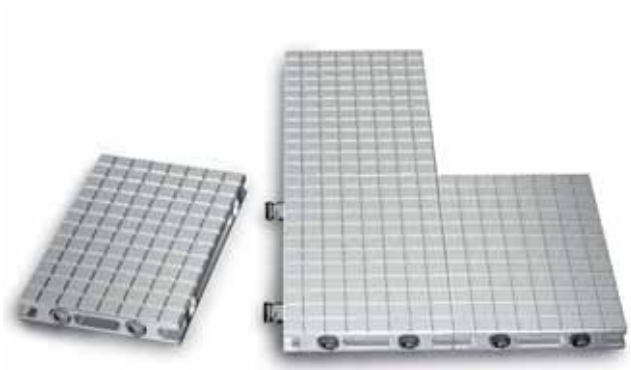

The modular concept allows connection of several vacuum chucks. The vacuum supply to each chuck maintained by connecting sleeves.

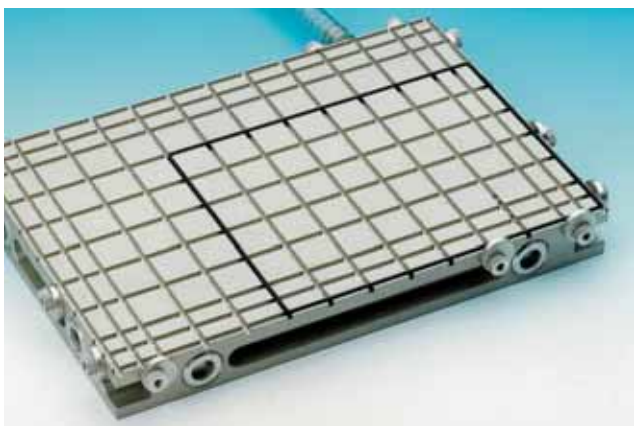

Grid 25 type

O-shaped seal

Nr.	Dia.	Length
00070	ø 4,0mm	1m

Used for sealing grid chucks or workpiece specific contours. This high quality seal is placed into the slots of a vacuum grid type chuck to define the clamping area.

Minimum order quantity 50m

Witte vacuum chucks are available in other versions and dimensions on request

Grid chucks

standard type, grid 12,5 mm

Nr.	A	B	C	D	
285709	300	200	38	12,5	6,4
80807	400	200	38	12,5	8,5
80808	500	200	48	12,5	19,4
80809	600	200	48	12,5	16,2
80810	400	250	48	12,5	13,5
80811	500	250	48	12,5	16,8
80812	400	300	48	12,5	16,2
80813	500	300	48	12,5	20,2
80814	400	400	48	12,5	21,5
80815	600	300	48	12,5	24,2
80816	600	400	48	12,5	32,3
80817	800	400	48	12,5	43
80818	1000	500	48	12,5	67

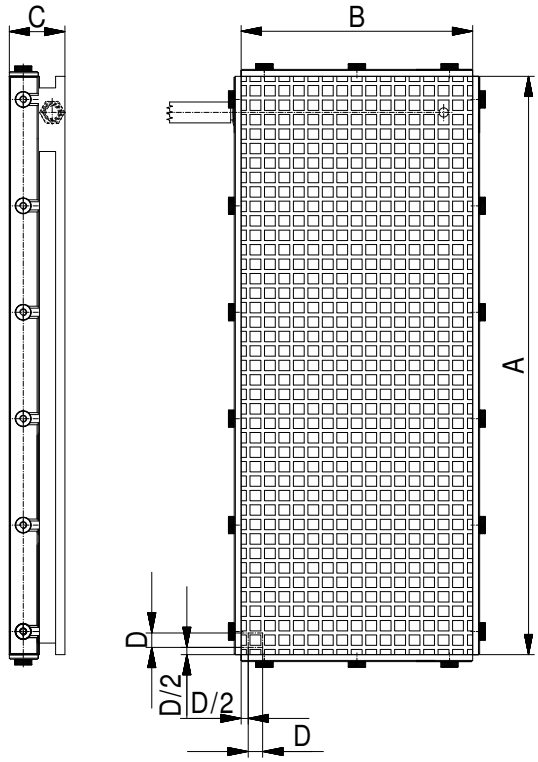

Vac-Mat adapter plate

for Grid chucks

Nr.	A	B	C	Vac-Mats	
81995	300	200	10	10	2,7
84748	400	300	10	11	4,5
81994	600	400	10	12	8,1

Supply includes:

- Aluminium adapter plate
- Vac-Mats

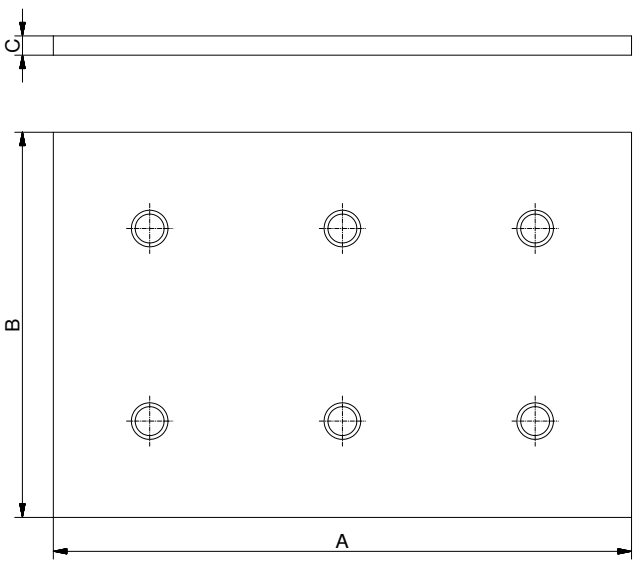

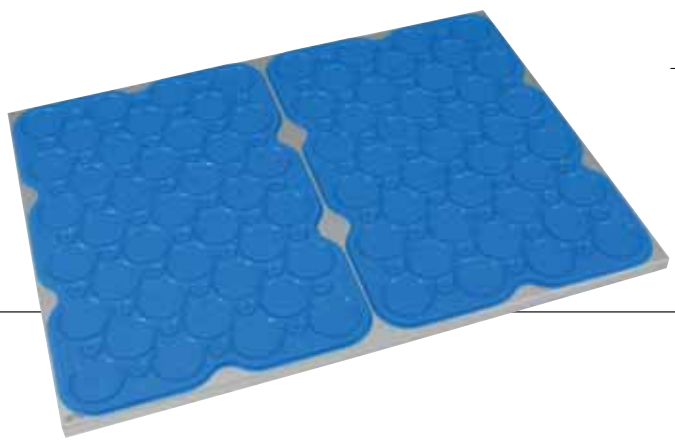

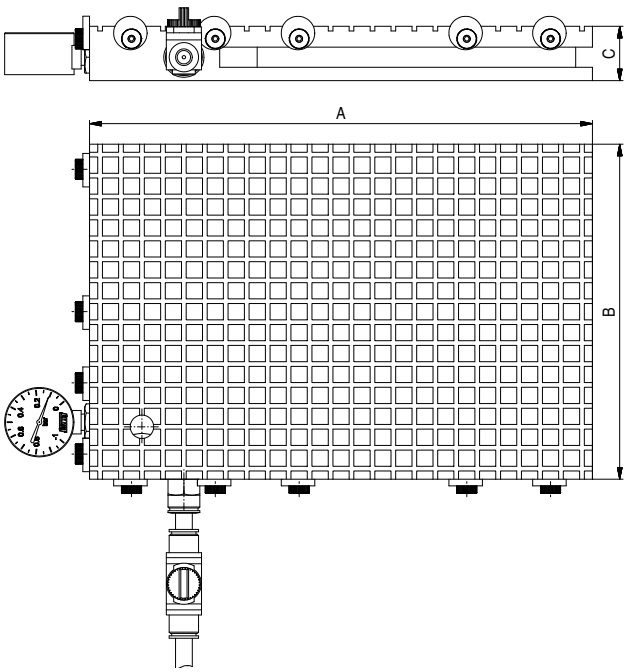

Grid vacuum chuck Starter Sets

Grid vacuum chuck with vacuum supply via Venturi valve

Nr.	A	B	C	kg
282126	300	200	32,5	5,3
282127	400	300	32,5	10,6
282128	600	400	32,5	21,2

Supply includes:

- Grid vacuum chuck
- Vacuum supply (Venturi valve integrated in chuck)
- O-shaped seal ø4mm
- pressure hose with plug connection
- 2 clamps for mounting chuck
- Tool for changeover from Venturi valve to vacuum pump

These tried and tested standard grid type vacuum chucks as described on page 19 are made of medium tensile aluminium or steel.
The grid size is 12,5 mm. The height adjustable excentre stops enables fast, accurate positioning of parts and restricts sideways movement

Vacuum supply made easy via compressed air (ISO 8573-1:2010) as operating medium.The integrated vacuum pump (Venturi System) requires operating pressure of 3,5-6 bar. End vacuum is 80mbar absolute (92% vacuum). The chuck has an integrated silencer to reduce noise. Chuck can be used with integrated Venturi valve or with a vacuum pump. Tools for changeover are included.

Grid chucks- Special design

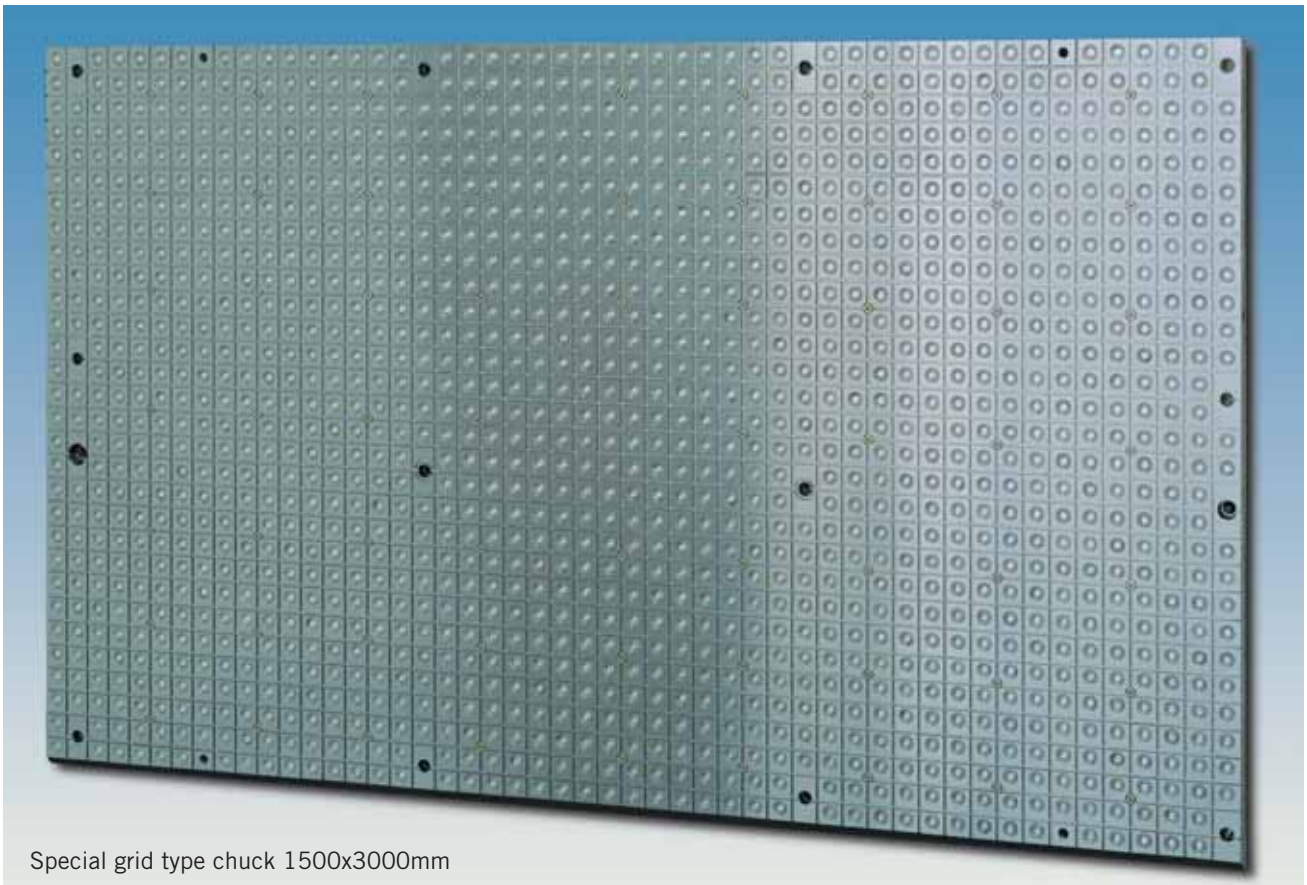

Special grid type chuck 1500x3000mm

In addition to standard sizes shown in the catalogue Witte grid type chucks are also custom built to suit your requirements up to dimensions of more than 40m^2.
Dimensions of chuck and clamping area, grid size, slot width, downforce and best type of clamping surface are all details taken into account to supply a chuck which gives optimal results for the application in question.

Chucks can be made according to a customer's workpiece design drawing, let us help you find the best way to clamp your workpiece.

Customized vacuum chuck for the aircraft industry, similar chucks have also been supplied for the spacecraft industry

3D Vacuum chuck with several movable segments for clamping aircraft fuselage parts during milling and friction stir welding processes

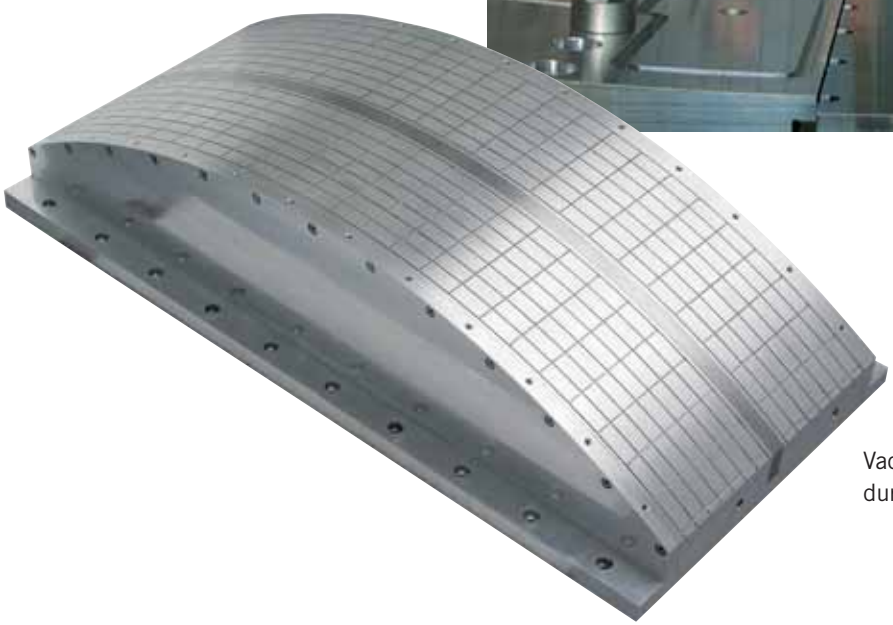

Vacuum fixture for clamping aircraft wing parts during friction-stir welding

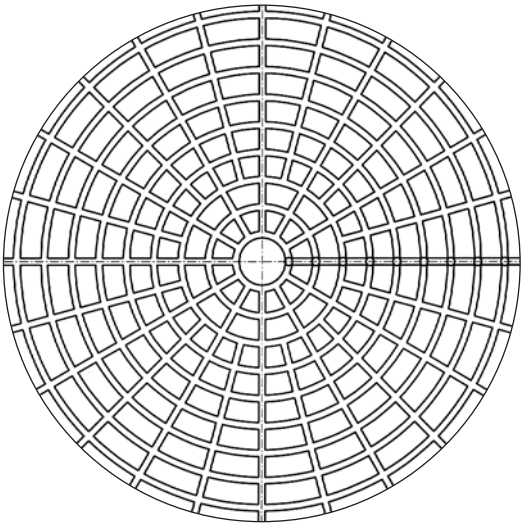

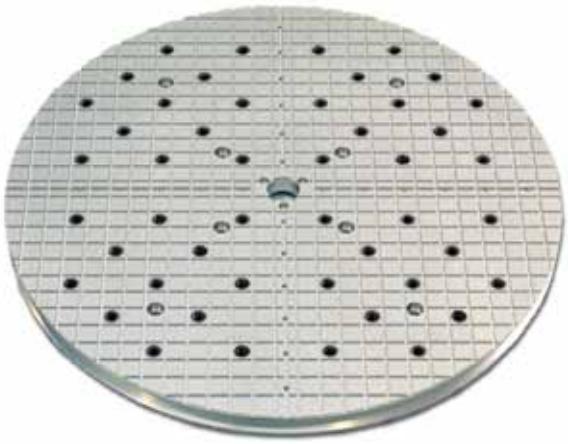

Circular chucks

Suitable for circular type workpieces

Applications
For simple shaped workpieces
with a rough surface and heavy duty milling
- Grinding
- Milling
- Turning

Advantages
- Strong hold down force
- For universal applications
- Secure clamping of rough workpiece surfaces due to high friction properties
- The O-shaped seal evens out any irregularities between workpiece and chuck surface

Handling
- Any shape or size of chuck made to measure
- Recommended grid size depends on workpiece contour and dimensions
- Clamping area defined by O-shaped seal
- Finely gridded vacuum chucks for extremely small parts
- Ideal as a base for many solutions together with special vacuum adapter plates

Witte circular grid chucks are not standard and available only on request

Slot vacuum chucks

Standard sizes
Adapter mats
Custom made chucks

The chuck surfaces feature slots depending on application. For clamping of work pieces, which do not cover the entire surface, rubber adapter mats are required.

Applications

For light machining operations such as

- Milling
- Drilling (e.g. printed circuit boards, electronic components)
- Engraving
- Machining of complicated work piece shapes with cutouts etc.

Special advantages

- Low height
- Wide range of applications through the use of rubber adapter mats
- Ideal for HSC (High Speed Cutting) initial milling together with plane-parallel pre-machined rubber adapter mats
- Clamping very small work pieces is possible

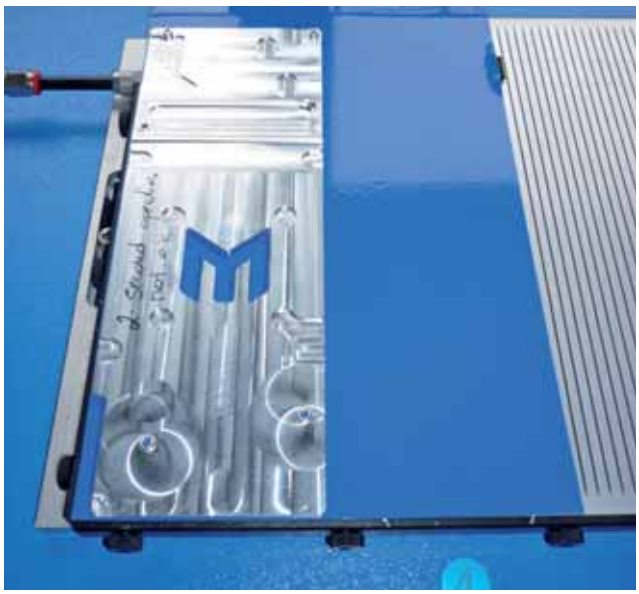

Handling

- Simplifies part positioning using height adjustable stop bars
- Defining of active vacuum area using vacuum stopper and rubber adapter mats (Example see picture above)

Slot vacuum chucks

Vacuum plate 28mm high

Nr.	A	B	C	D	
90667	300	200	320	28	4,6
84428	400	200	420	28	6,4
84429	350	250	370	28	6,8
84430	300	300	320	28	7
84431	400	250	420	28	8,2
84432	400	300	420	28	9,2
84433	400	400	420	28	12,9
84434	500	300	520	28	11,5
84435	600	300	620	28	13,6
84388	600	400	620	28	19,4

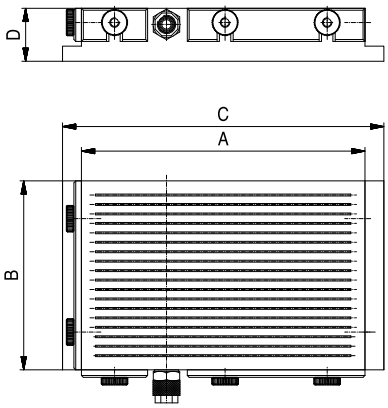

Supply includes:

- Slot chuck
- 3 stops
- 1m hose with connector
- 1 rubber adapter mat, red
- 1 vacuum stopper

These slot vacuum chucks are 28 mm high and have a 10mm clamping area on both face ends.
The chucks with 38/48mm height have a 10mm clamping area allround.

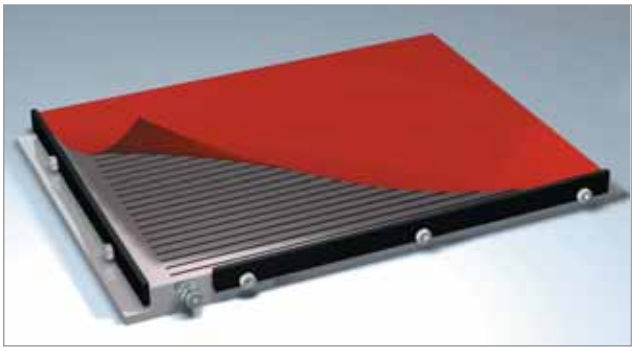

The rubber adapter mat included in supply can be configured according to work pieces by punching holes within the area of part contour. It enables work pieces with complicated contours to be clamped for manufacturing processes.

Other dimensions and materials i.e. steel are available on request.

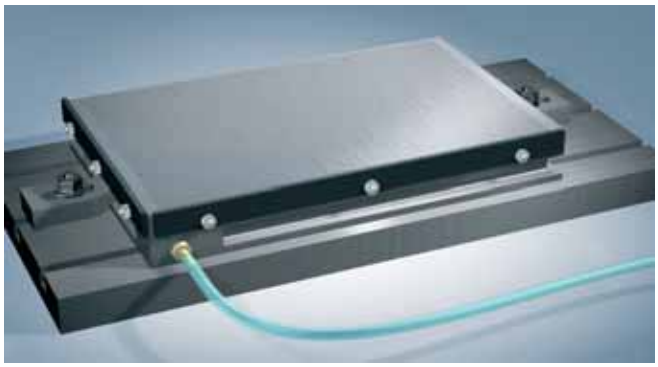

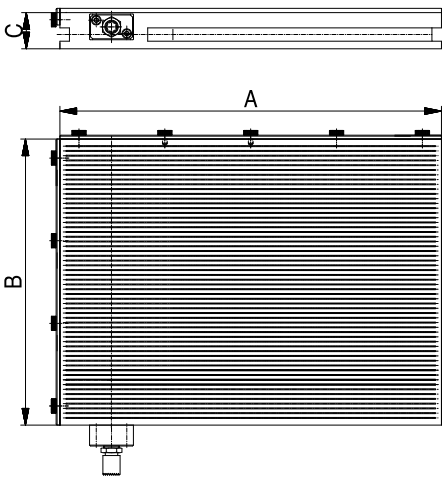

Slot vacuum chucks

Vacuumplate 38mm/48mm high, aluminium

Nr.	A	B	C	kg
285836	200	300	38	8
80021	400	200	38	10,7
80022	500	200	48	13,4
80023	600	200	48	16
80024	400	250	48	13,4
80025	500	250	48	16,4
80026	400	300	48	16
80027	500	300	48	20
80130	400	400	48	21
80028	600	300	48	23,5
80136	600	400	48	30,7
80029	800	400	48	40
80429	1000	500	48	67

Supply includes:

- Slot chuck
- 2x Stops
- 1m Hose with Connector
- 1 Rubber adapter mat
- 2x clamps

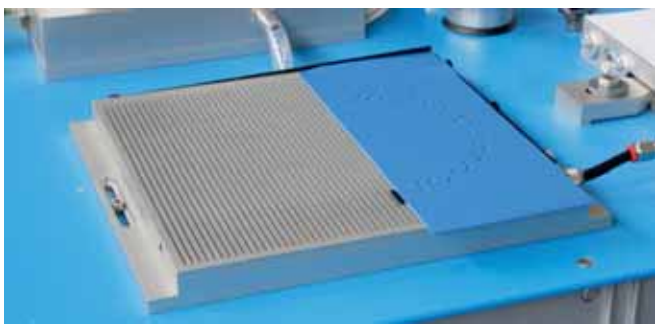

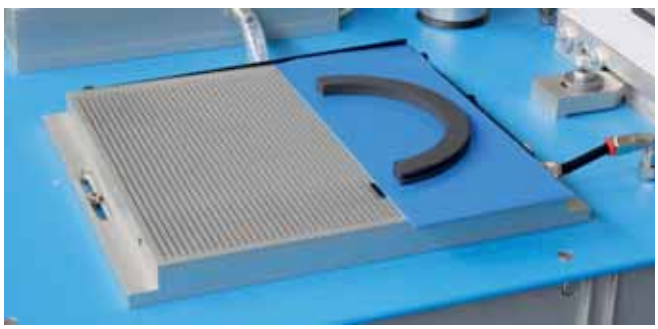

Slot chuck with blue rubber adapter mat. Mat is laid between part and chuck. It covers unused areas, a high friction value additionally secures part against slipping. The black vacuum stopper, defines active vacuum area.

Other dimensions and materials i.e. steel are available on request.

4 slot chucks on a machine used for manufacturing aluminium carriers. Machining of inner and outer contours is done in one process thanks to rubber adapter mats.

Slot vacuum chuck with three vacuum areas which can be used individually.

Slot vacuum chucks and rubber adapter mat

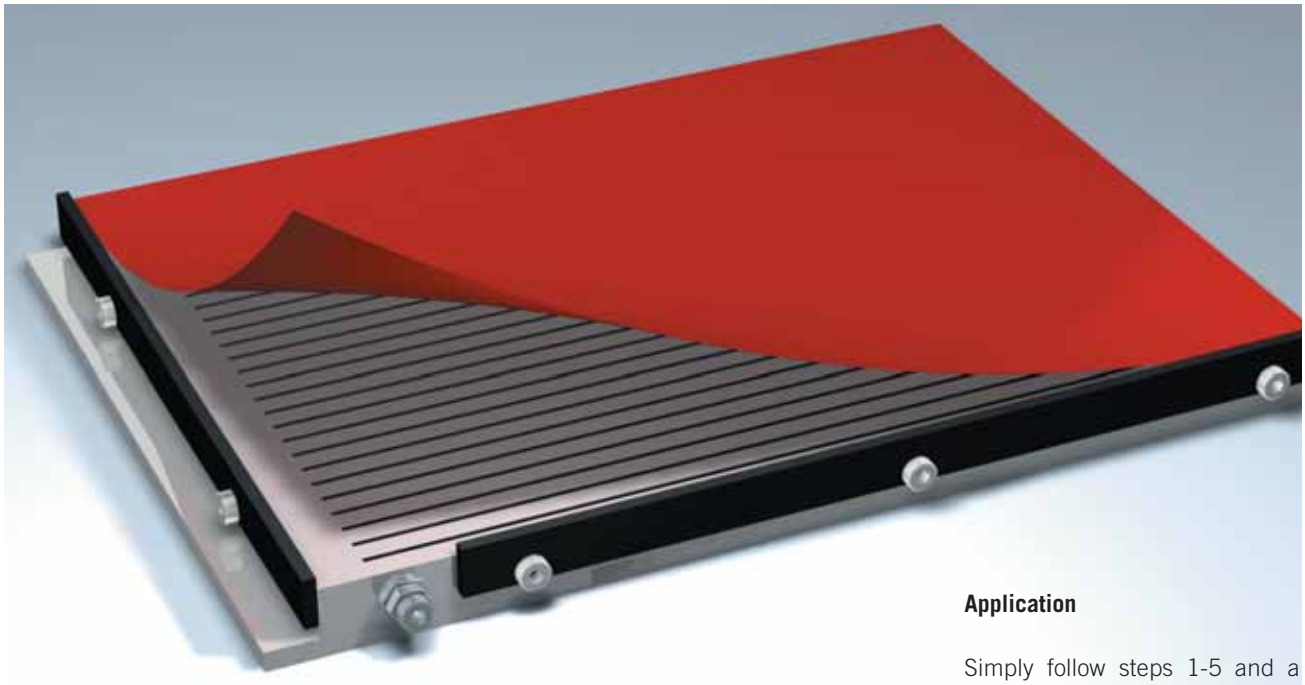

1 Lay the rubber adapter mat onto the chuck covering all the slots.

2 Position workpiece with the help of adjustable end stops. Then draw round the contour using an ordinary pen

Application

Simply follow steps 1-5 and a custom built fixture is ready in seconds. When vacuum is switched on mat and workpiece are sucked down together. The excellent friction values offer especially good resistance to displacement forces during machining.

Using the slot chuck with the rubber adapter mat allows drilling of holes and milling or cutting of pockets and cutouts into the mat to a depth of 1,5mm without losing vacuum. As the mat suffers hardly any wear and tear it can be used often for workpieces with the same contour.
Certain applications allow the tool to work to depths of 1,5mm into the mat.
Height tolerance of the mats lies in a range of +/- 0,3mm (DIN 7715, part Kl. P2)

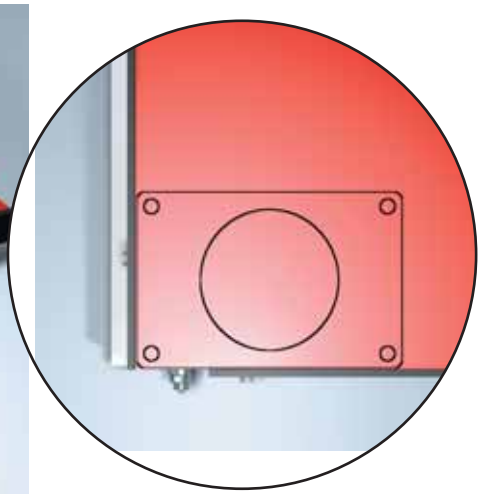

3

Here you can see the workpiece contour

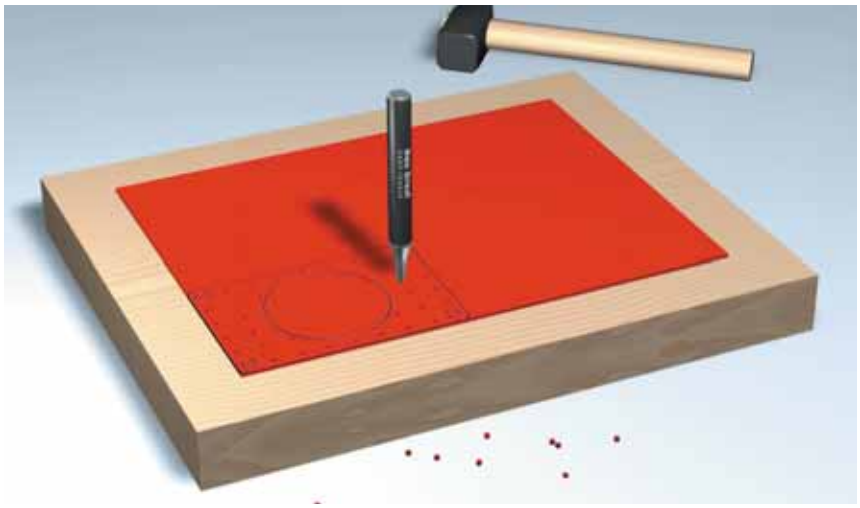

4

Remove the mat and punch holes into the area corresponding to the actual clamping surface of the workpiece. The holes should be approx. 3-8 mm Dia. in a 10mm grid and lie on slots of the chuck

5

Replace workpiece onto the mat. The excellent friction of the rubber material counteracts high-displacement forces better than any other vacuum system

Rubber adapter mats

for slot vacuum chucks

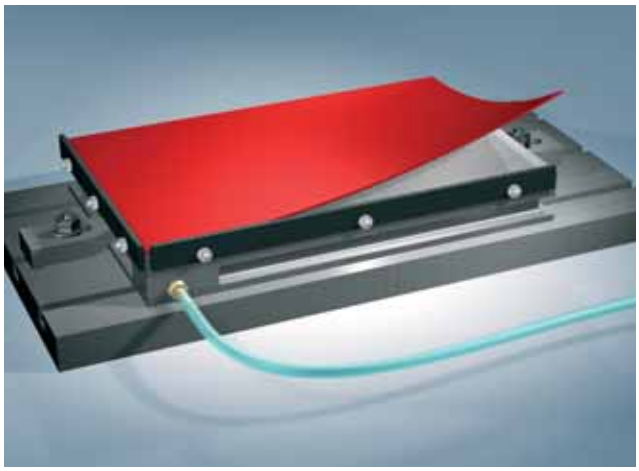

Rubber adapter mats, brown, for use on slot type vacuum chucks (see also page 28)

Nr.	A	B	C	g
00416	200	300	3	226
00609	200	500	3	378
00564	200	600	3	453
00009	300	150	3	170
00010	350	150	3	200
00011	400	200	3	300
00013	350	250	3	330
00014	300	300	3	340
00015	250	400	3	370
00016	400	300	3	460
00017	400	400	3	602
00415	500	300	3	560
00164	500	500	3	941
00418	500	1000	3	1890
00437	600	300	3	678
00414	600	400	3	904
00409	1000	1000	3	3766
00682	1000	2000	3	7550
00732	1000	2000	1	2500
00733	1000	2000	1,5	3980

Other dimensions available on request

Rubber adapter mats

blue

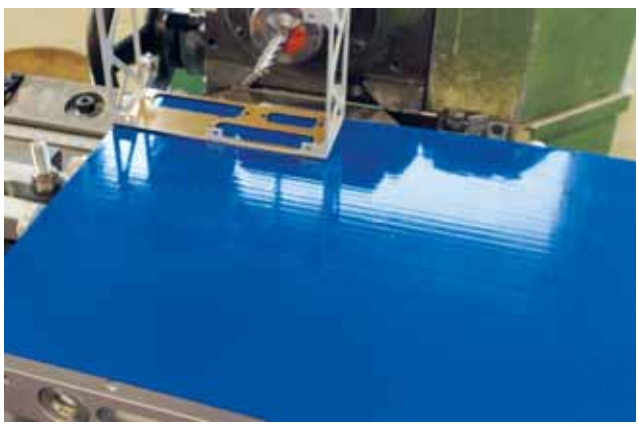

Nr.	l x w	Thickness	
14927	2000 x 400	1	1
17302	9100 x 400	1	4,5

The blue rubber adapter mat is placed between part and chuck. It covers areas of the chuck not in use and secures part against slipping due to high friction value.
Areas covered by part, must be punched with holes or cut with slits.
Rubber adapter mat - blue.
Only available as a complete roll.

Rubber adapter mats

for slot vacuum chucks

Nr.	A	B	C	g
00280	200	300	3	260
00849	200	500	3	378
00850	200	600	3	453
00851	150	300	3	170
00825	200	400	3	360
00852	250	350	3	392
00853	300	300	3	410
00796	250	400	3	370
00854	300	400	3	540
00855	400	400	3	710
00856	400	500	3	880
00857	500	500	3	1100
00858	300	600	3	683
00791	400	600	3	1100
00859	500	1000	3	1900
00860	1000	1000	3	3800
00861	1000	2000	3	8000

Other dimensions available on request

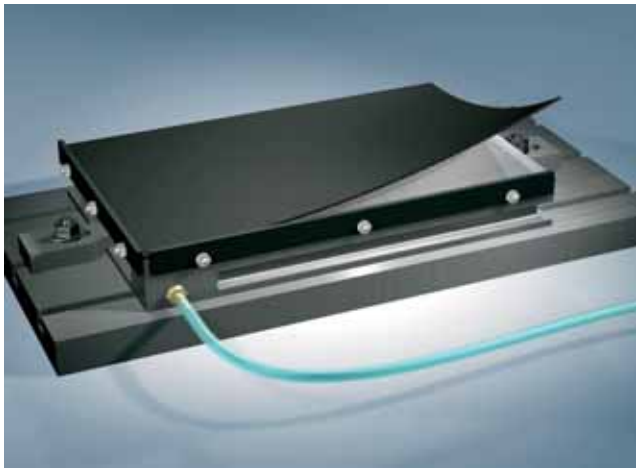

Rubber adapter mats, black, made of synthetic elastomer. These mats can be milled and thereby achieve much better plane-parallelism

Vac-Mat™ adapter plates

for slot vacuum chucks

Nr.	A	B	C	Vac-Mats	
285136	300	200	10	10	2,7
285137	400	300	10	11	4,5
284497	600	400	10	12	8,1

Supply includes:

- Aluminium adapter plate
- Vac-Mats™
- O-shaped seal

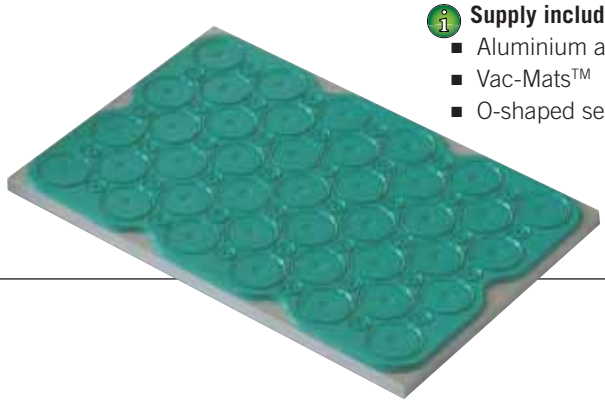

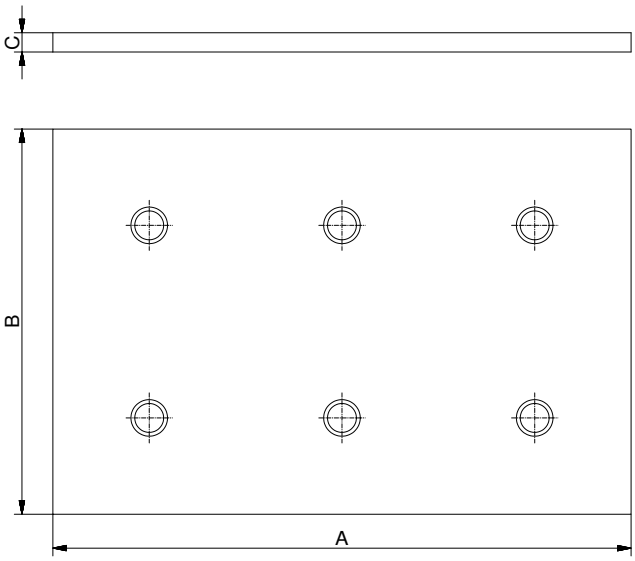

Slot vacuum chuck with 3 vacuum areas, which work combined or independently

Slot vacuum chucks

Examples of special designs

Slot vacuum chuck with special adapter plate

Slot vacuum chucks are particularly suitable for lighter cutting processes such as engraving, grinding, etc. parts with complex geometrical shapes, including those with cutouts (e.g. front panel).
Also working with adapter plates for multiple clamping is possible.
By using a rubber adapter mat it is possible to drill holes and to mill pockets and breakthroughs - without loss of vacuum. The adapter mat is 3mm thick, so a tool can penetrate about 2.5 mm into the adapter mat.

Circular vacuum chuck with ring slots for turning rings

Slot vacuum chuck mounted on a zero reference clamping system

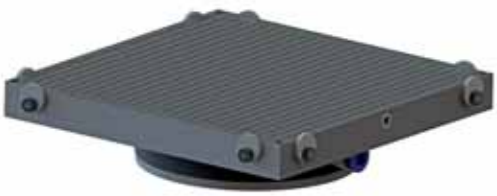

Slot chuck with integrated rotation joint for use on an NC rotary table

View from below

µ-porous Vacuum chucks

Modular version in standard sizes or special design

These chucks have a porous surface area made out of sinterbronze, ceramic or porous aluminium depending on the application and workpiece. METAPOR© opens a whole new perspective for different clamping solutions

Application
Preferred workpieces:
- Thin walled (i.e. paper, foils, plate bars, metal strips)
- Fine (i.e. optical)
- Soft materials (i.e. rubbers)

for work such as:
- High precision measuring
- Precision milling
- Silicon wafer production

Advantages
- Due to the absence of grooves and holes workpieces are not deformed for instance on inserts in the clamping area
- Milling through the workpiece is possible with the use of our Friction booster
- METAPOR© has different quality grades and can also qualify for clean room surroundings (Kl. 10)

Handling
- Modular chucks can be interconnected to enlarge the surface area.
- Part specific special designs available

µ-porous Vacuum chuck

with METAPOR© CE100 White

Nr.	A	B	C	
91488	300	200	38	5,7
92294	400	300	38	11,4
92296	600	400	38	23

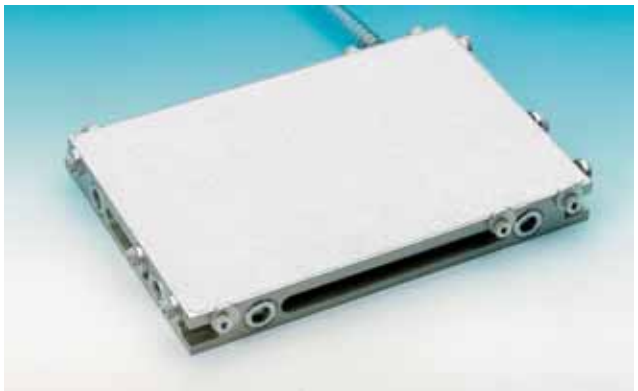

Plate inlay in Metapor CE 100 WHITE fine porous material with low pore diameter and very homogenic total porosity

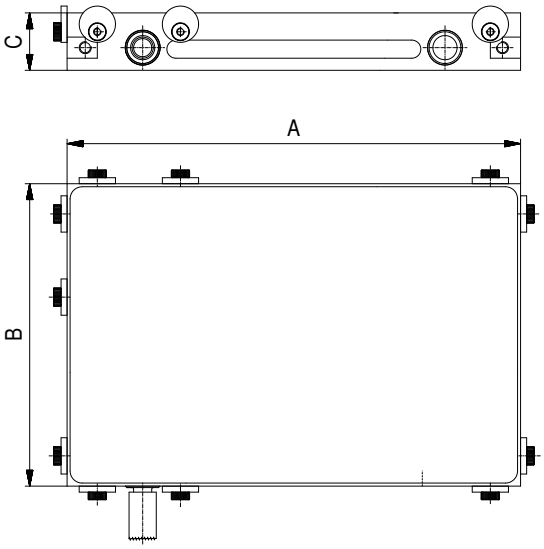

Supply includes:

- Modular Metapor™ vacuum chuck
- 12x Height adjustable excentric end stops
- Vacuum chuck adapter
- 1m Vacuum suction hose with plug
- 2 x Step heel clamps, alu
- Tools for setting up

µ-porous Vacuum chuck

with METAPOR© MC100 White

Nr.	A	B	C	
91021	300	200	38	5,7
92290	400	300	38	11,4
92291	600	400	38	23

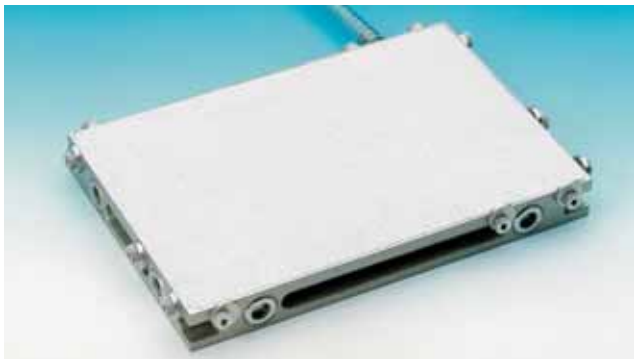

Plate inlay in Metapor MC 100 WHITE fine porous material with low pore diameter and very homogenic total porosity, with larger porosity compared to BF 100 AL

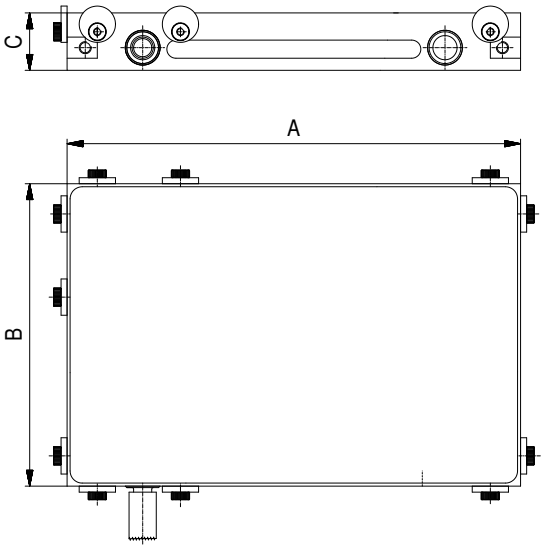

Supply includes:

- Modular Metapor™ vacuum chuck
- 12x Height adjustable excentric end stops
- Vacuum chuck adapter
- 1m Vacuum suction hose with plug
- 2 x Step heel clamps, alu
- Tools for setting up

Other Dimensions available on request.

Further information on Metapor see page 96

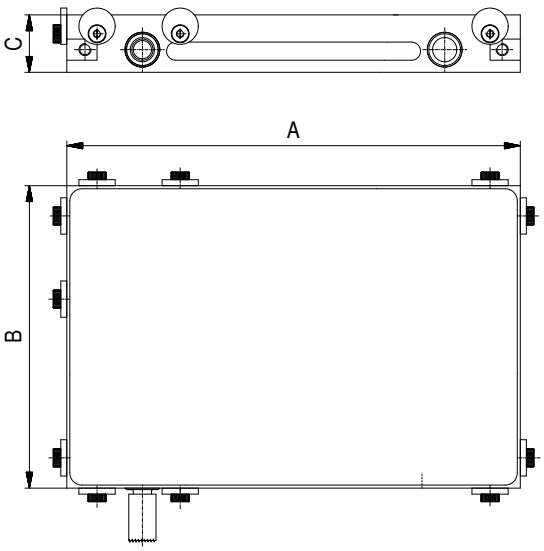

µ-porous Vacuum chuck

with METAPOR© BF100 Al

Nr.	A	B	C	
83401	300	200	38	5,7
84380	400	300	38	11,4
84381	600	400	38	23

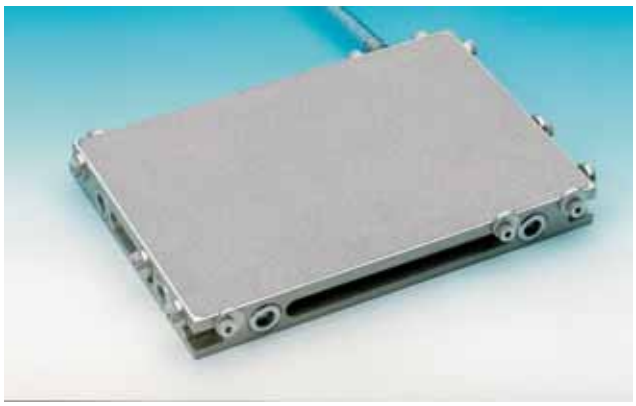

Supply includes:

- Modular Metapor™ vacuum chuck
- 12x Height adjustable excentric end stops
- Vacuum chuck adapter
- 1m Vacuum suction hose with plug
- 2 x Step heel clamps, alu
- Tools for setting up

Plate inlay in porous material Metapor BF100 AL details on page 96

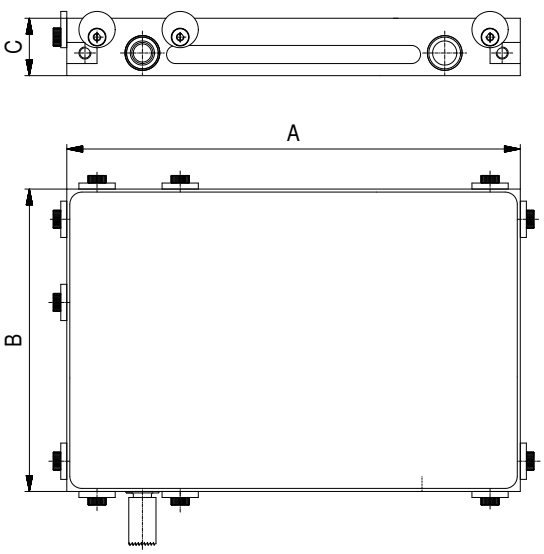

µ-porous Vacuum chuck

with METAPOR© HD 210

Nr.	A	B	C	
94315	300	200	38	6,1
94316	400	300	38	12,2
94317	600	400	38	25

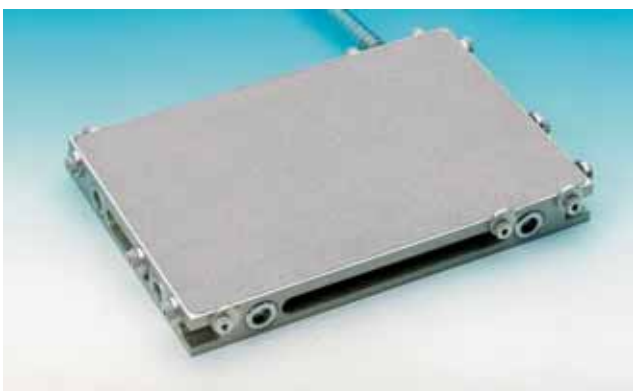

Supply includes:

- Modular Metapor™ vacuum chuck
- 12x Height adjustable excentric end stops
- Vacuum chuck adapter
- 1m Vacuum suction hose with plug
- 2 x Step heel clamps, alu
- Tools for setting up

Plate inlay in porous material Metapor HD210 AL for temperatures up to 210°C

Sintermetal Vacuum chuck

Double layered, hardwearing sinterbronze inlay

Nr.	A	B	C	
84686	300	200	38	7,1
84687	400	300	38	14,2
84688	600	400	38	28,4

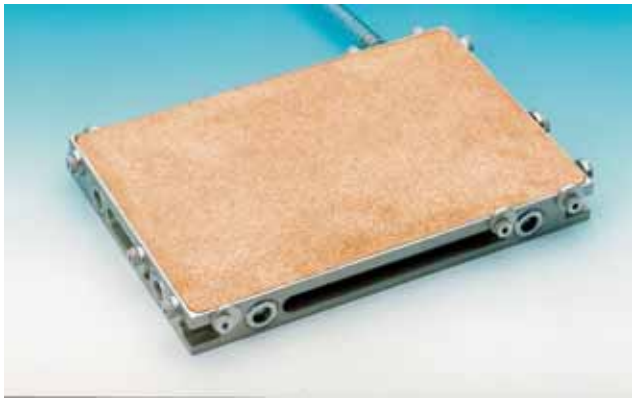

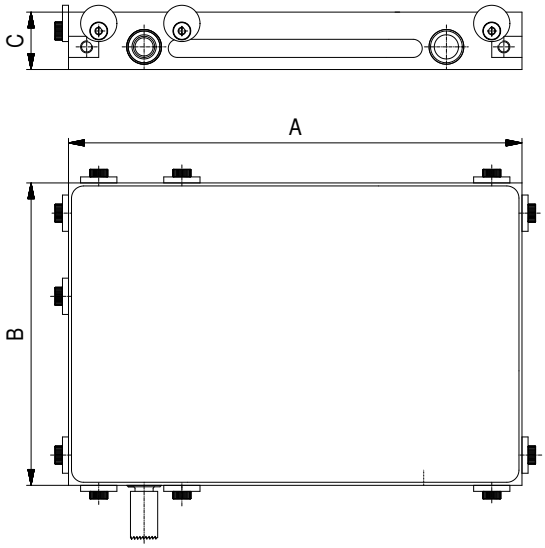

Supply includes:

- Modular Metapor™ vacuum chuck
- 12x Height adjustable excentric end stops
- Vacuum chuck adapter
- 1m Vacuum suction hose with plug
- 2 x Step heel clamps, alu
- Tools for setting up

Friction Booster

Protects Metapor chucks from damage when through cutting or lasering parts

Nr.	A	B	C	Stck	kg
00839	300	200	<1	50	1,8
00840	400	300	<1	25	1,8
00841	600	400	<1	25	3,6

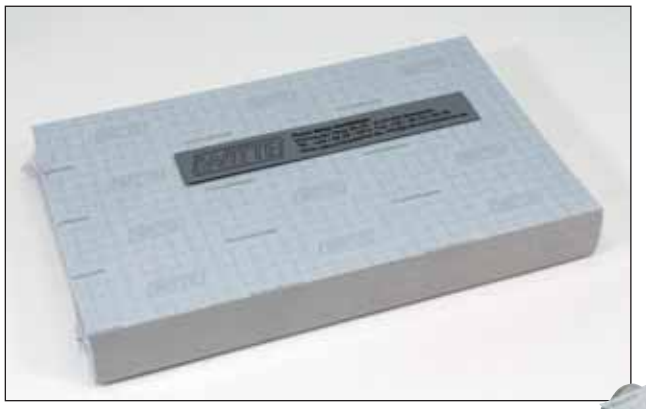

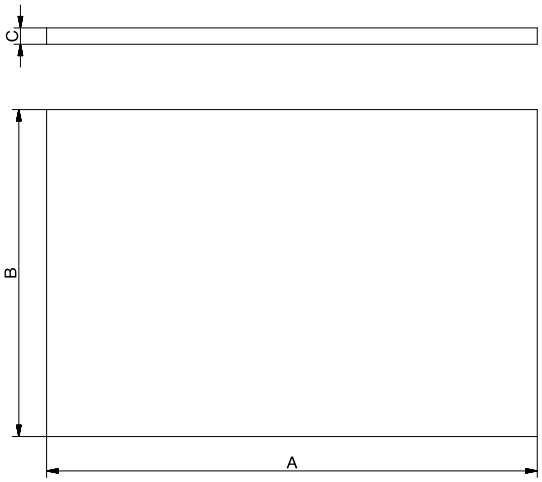

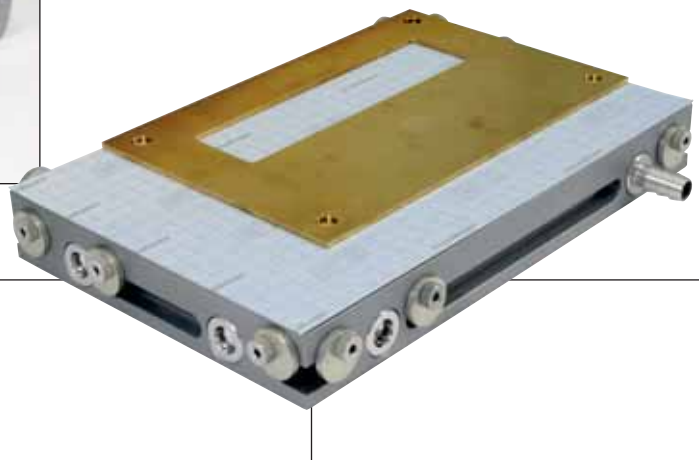

Other Dimensions available on request.

Further information on Metapor see page 96

Vacuum Clamping Technology

for new technologies in research and development

Special version with integrated heating and electronic temperature control

1. Clamping with Witte vacuum chucks
Vacuum chucks from Witte have proven successful in many areas of semiconductor technology and made a name for accurate, fast and "gentle" clamping.
These lightweight, yet very accurate vacuum chucks are made of aluminum alloy and usually have a micro-porous clamping surface of Metapor material.
However, custom-built perforated-grid chucks with small holes arranged in a specific pattern can also be implemented.
(See pictures)

2. Flexible
Besides standard versions of this vacuum chucks, Witte offers every conceivable specific design and dimension. We analyze technical requirements and environmental conditions of customers' processes, and develop a concept together with them. Various technically feasible configurations have already been manufactured.

3. Accurate
A modern machine shop and climatized measuring rooms with high precision measuring machines ensure excellent quality of products. Vacuum chucks are available **with flatness and / or parallelism of < 5µm** if the application profile of the customer requires it.

4. Reliability
A chuck surface comprising of micro-porous material guarantees completely "flat" clamping. Thin carrier foils or wafers are not deformed by suction holes, suction grooves or similar which occurs during conventional clamping methods. The low weight and accuracy of such Witte chucks is also advantageous for automated applications.

5. Universal
Another major advantage of micro-porous vacuum chucks is that the vacuum still works extremely effectively even when the micro-porous surface is not covered completely. This enables clamping of different sized parts on the same chuck. The porous surface may also be divided into separately operable areas with individual switches. (See example opposite)
Integrated hovercraft technology, ejector and lifting pins are some of the technical ingredients of these innovative concepts.
Furthermore, vacuum chucks for certain processes can be **"heatable"** up to a temperature as high as 150°C with corresponding temperature controls (see picture above.).
Likewise, **cooling** systems or **light transparency** applications are possible.

6. Everything from one source
In addition to standard and custom vacuum chucks Witte supplies all necessary accessories such as simple ejectors, vacuum pumps, rotary joints, hoses, solenoid valves and much more.
Our expert staff can advise you and look forward to your inquiry.

Specially designed porous chuck with three individual clamping areas, stops for part positioning and lifting pins for easy removal of wafers.

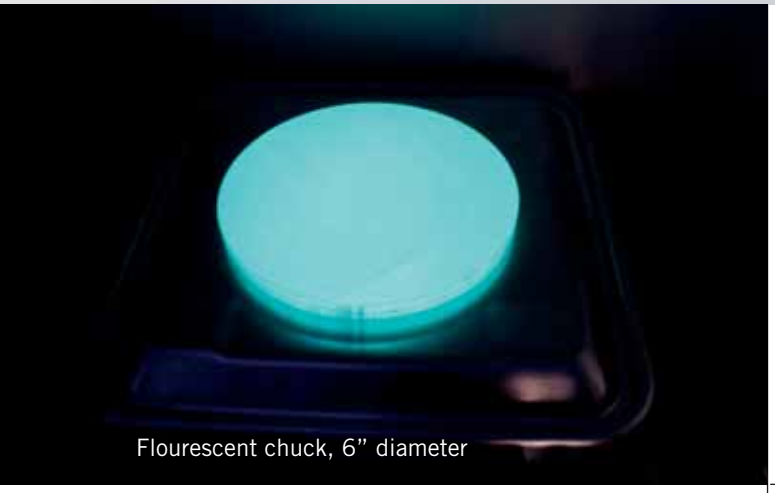

Flourescent chuck, 6" diameter

Independent vacuum chuck.
Clamping of parts on chuck completely free of external supply lines.
Battery, vacuum pump, controls, display and valves are all integrated

Finely milled vacuum chuck for clamping wafers, clamping area microporous material Witte MP CE100 WHITE flatness accuracy <0,005mm

Grid hole chuck with finely milled surface

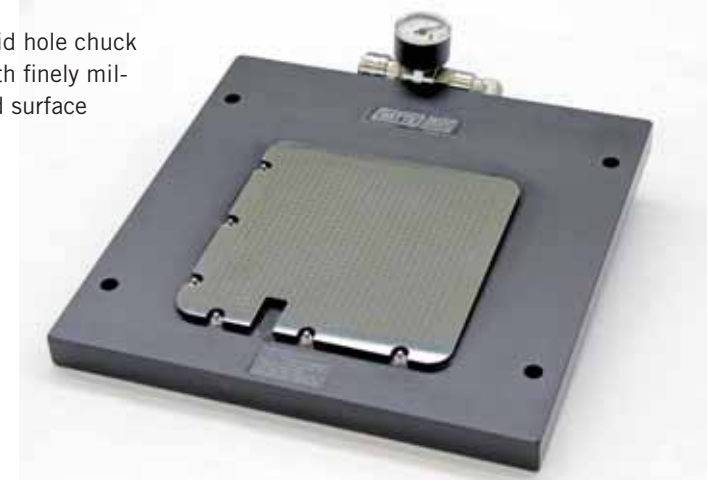

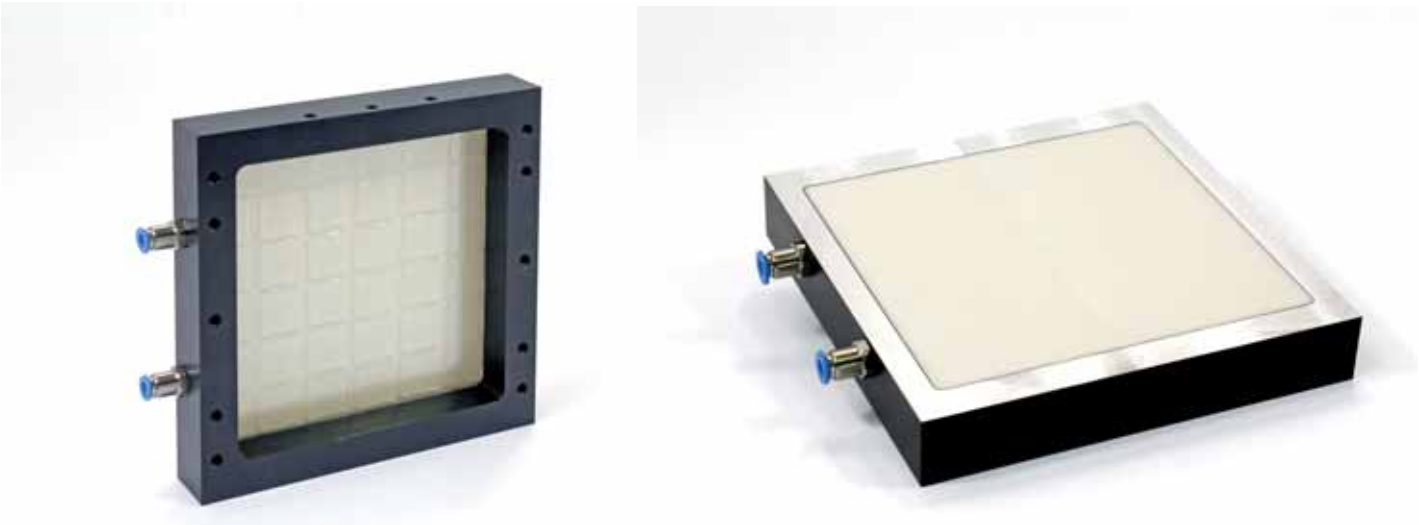

DLC light transmitting chuck for clamping parts, views from above and below

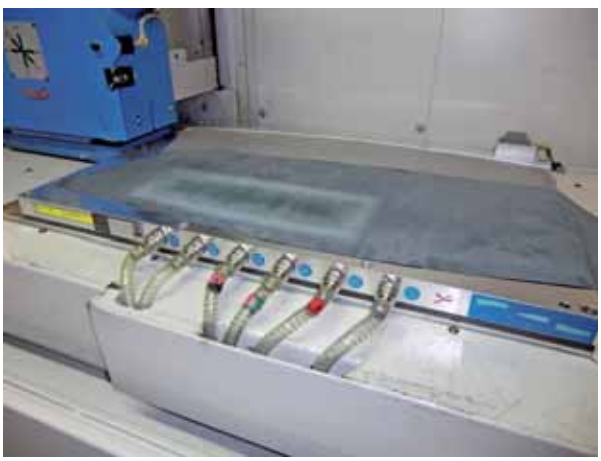

Application in automotive industry, leather clamped on visible side for grinding predetermined breaking points in areas of airbags on reverse side

µ-porous vacuum chucks

Further examples

Same chuck shown without leather parts

Vacuum clamping system for laser application. Detail shows both clamping areas and cutting channels.

Small size micro finely machined chuck

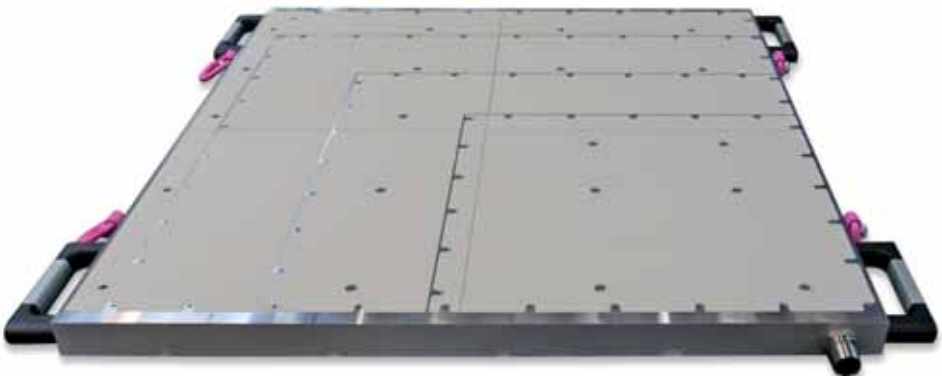

Vacuum chuck with four separately usable clamping areas

Vacuum chuck with micro porous clamping surfaces and holes for applications using light transference

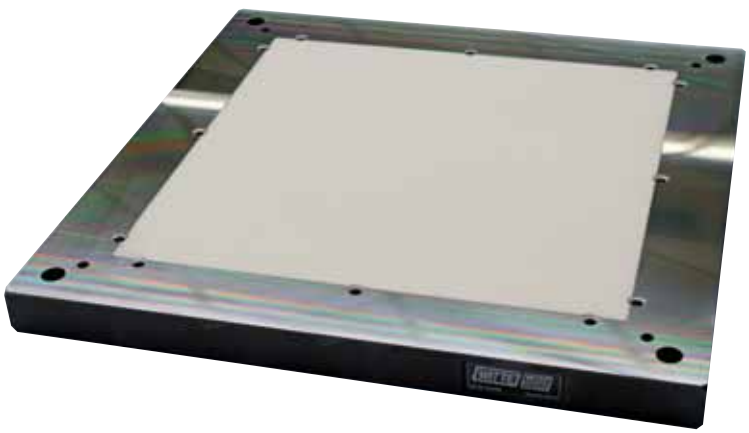

Vacuum chuck with two clamping areas and lifting pins for **automatic** controlled process

Vacuum chuck with three clamping areas and lifting pins for **manually** controlled process

DLC (Durchlicht chuck), light transmitting chuck for gentle clamping of parts during optical analysis process

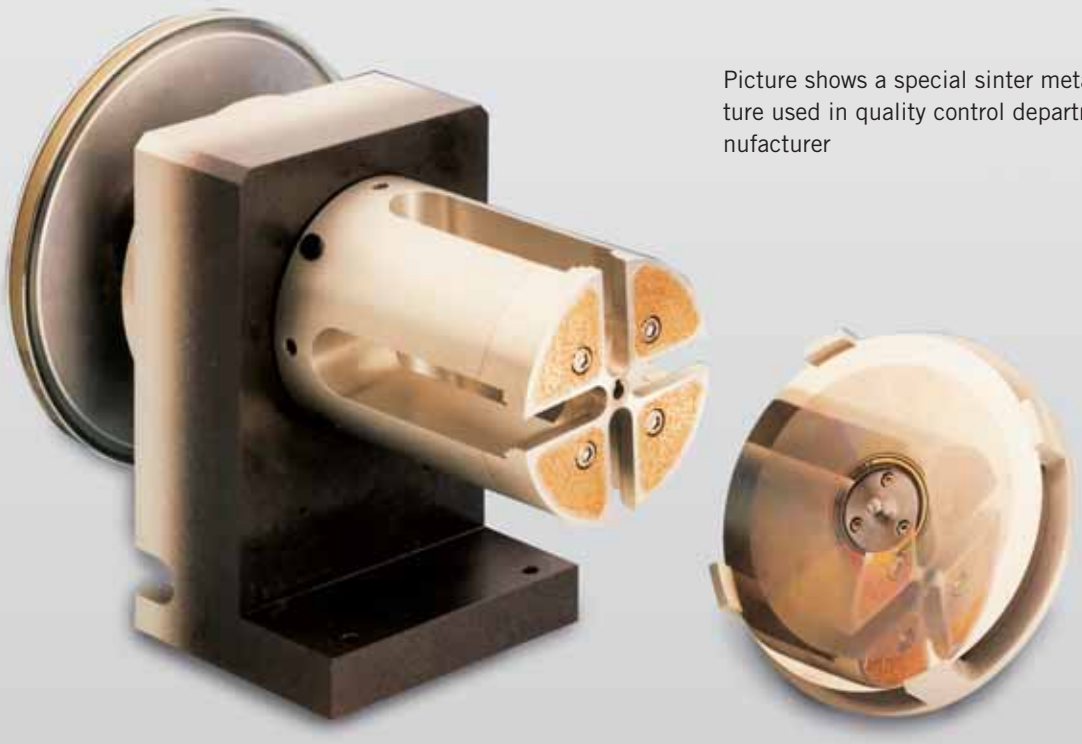

Picture shows a special sinter metal vacuum fixture used in quality control department of CD manufacturer

Sintermetal vacuum fixtures

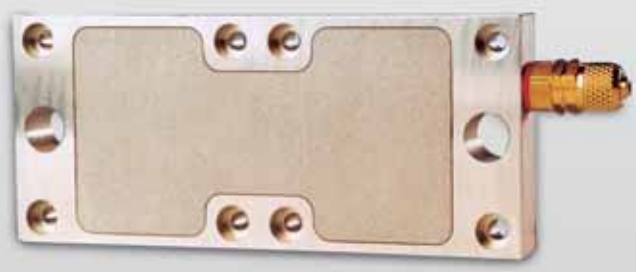

Vacuum chuck for credit cards

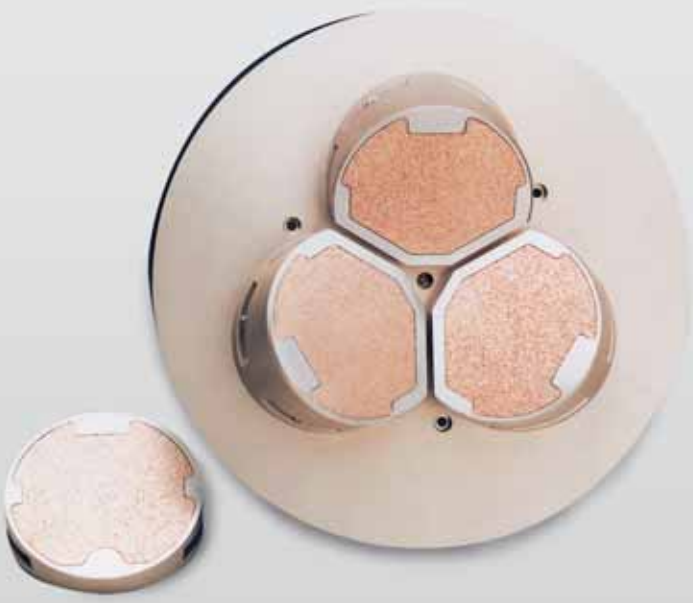

3D Vacuum chuck

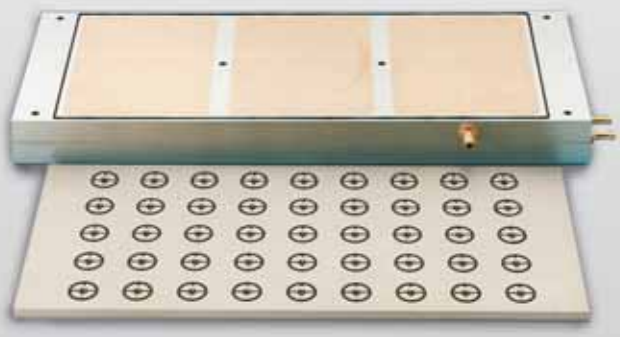

Sinter metal vacuum chuck with special adapter plate for clamping hard metal blanks during laser machining process.
It has an integrated cooling labyrinth which prevents inaccuracies, due to development of warmth which occurs during the laser machining process

Perforated grid chucks

Custom built

Surface area has many small bores. The large area enables secure clamping of sensitive work pieces such as foils used in printing or photographic industries.
These are only made to order according to customer data.

Applications
Highly accurate
- Clamping of films and foils on machines used to make printing plates during laser and UV exposure of films. Foils and conductors.

Advantages
- Sizes from 1.400 x 2.000 mm with an accuracy of 50 µm
- Vacuum clamping area need not be covered to 100%

Handling
- Easy positioning of workpiece with excentric end stops
- Only limited hold down force for machining purposes.

Vacuum clamping system with elevation function. On pult level valuable, sensitive prints and paintings are gently clamped using vacuum. Plate is raised automatically to vertical position and items are digitalized. Application takes place in a museum.

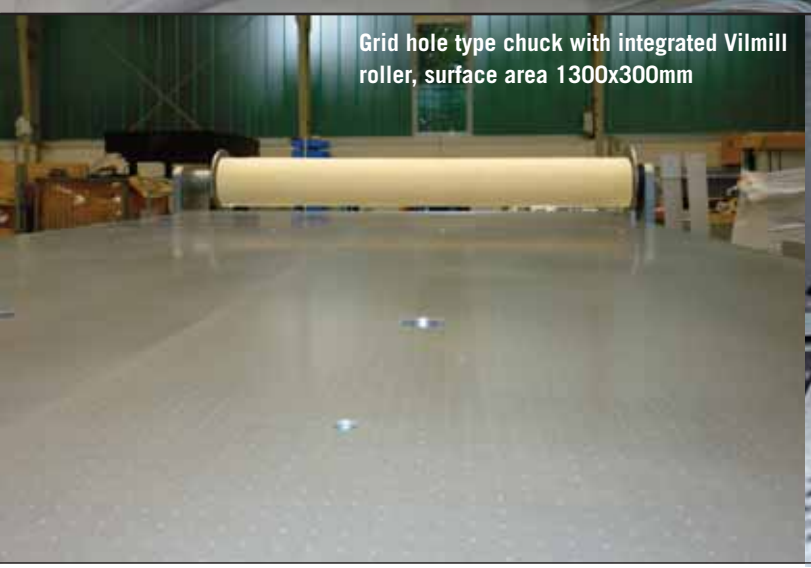

Grid hole type chuck with integrated Vilmill roller, surface area 1300x300mm

Vacuum clamping of carbon fibre part for accurate milling using Vilmill fleece

Vilmill & Vacuum

Partners for high-speed cutting of aluminium and plastics

If your job is to cut lots of small parts out of one large part the combination of vacuum and Vilmill is what you need.

Vilmill is a vacuum system comprising of a fleece-like, coated foil, a specially equipped vacuum chuck and a powerful pump system for vacuum supply.

The Vilmill foil is mounted between chuck and part. The warmth created during cutting causes the surface coating to melt and sticks the part to the chuck.

The vacuum is effective through the Vilmill foil, which at the same time acts as a puffer. The accurately balanced permeability of Vilmill foil increases the efficiency of vacuum chucks and reduces vacuum consumption.
Especially when cutting out small parts Vilmill offers additional security through the adherence effect. It greatly simplifies removal of small finished parts from the machine.

For maximum cutting speeds a thin layer of material should remain in order to use the complete part surface under vacuum until the last cut is made.

Vilmill is suitable for aluminium or plastic sheets up to 15mm thick. Only dry machining is possible and the working range in Z axis must be high enough to integrate a vacuum chuck.

Conditions for use of Vilmill™
- Minimum suction 250-300m³/h
- High vacuum
- Spindle rpm > 20.000 ¹⁄min
- Grid hole type chuck with 10mm grid
- Suitable adapted milling strategy;
  tool must go in and leave part via programmed ramp

Vilmill™-Foil Black
- No. **600290**
- Dim.: 0,35mm x 1000 x 100mm
- Weight per roll; 11,5kg (115g/m²)

Machining of thin metal sheets

The heat generated at the milling burr activates the adhesive coating on the mat and keeps even small parts in place.

Machining of aluminum sheets of greater thickness

Only the final feeding depth (0.1- 0.3 mm) cuts in the adhesive mat and separates the parts completely.

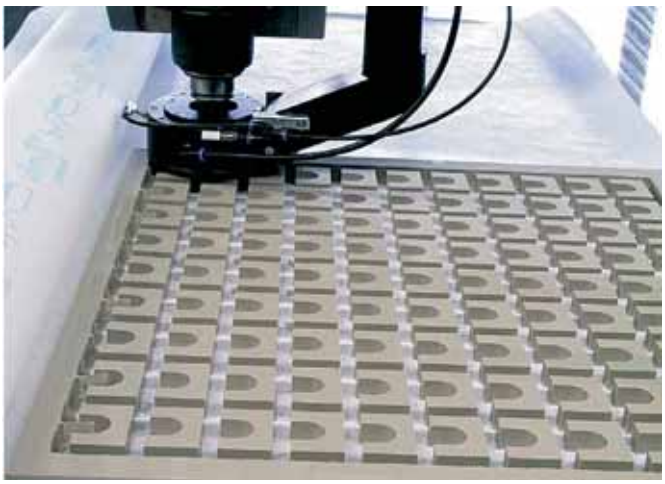

Machining of plastics

The adhesive coating is also activated during the machining of plastics and fiber compounds.

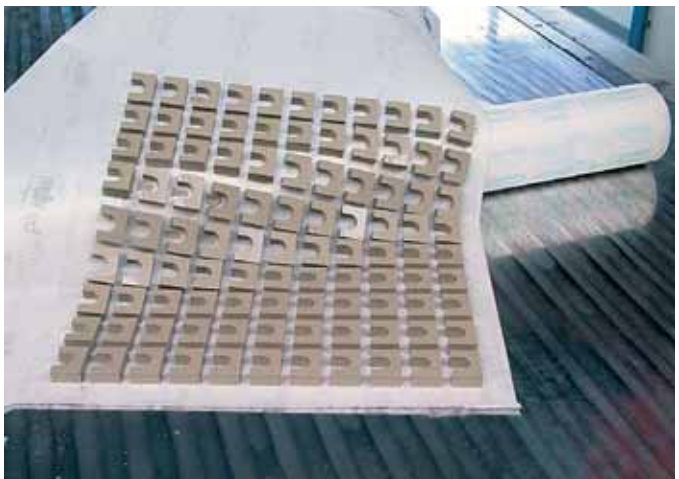

Vilmill adhesive foil

- Increase efficiency of vacuum chucks
- Fix parts during cutting
- Provide necessary space when material is cut through
- Are ideal for removing small parts after machining

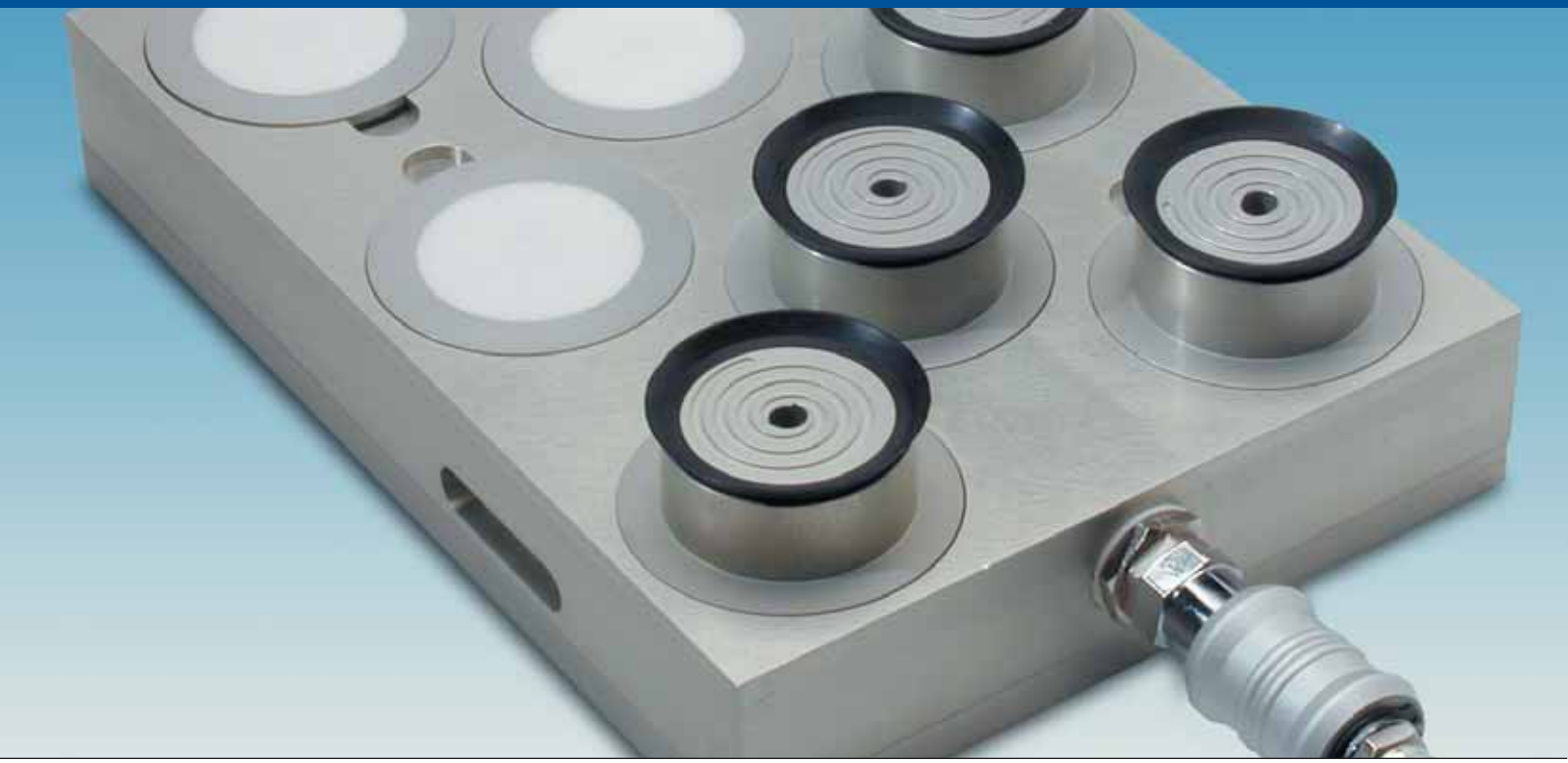

FLIP-POD™ Vacuum System

Alu FLIP-POD

FLIP-POD

This technology is ideal for

- Milling
- Grinding
- Drilling
- Cutting threads

Mainly for large workpieces made out of
- Wood
- Plastic
- Glass
- Cast metals

Suitable for
- Milled or rough surfaces.

Advantages
- Strong hold down forces enable the use of large machines.
- Bevels, contours and radii can be performed on the upper and lower workpiece surfaces.
- Clamping dimensions can be changed within seconds to conform to new workpiece sizes
- Can be used on most machine tables.

Handling
- Pods are the contact surfaces fort the workpiece
- Simply activate or deactivate the pods by turning them around.
- To clamp a workpiece effectively 6-8 pods are required.
- This modular system can be extended for larger clamping surfaces.

The crossection shows
- FP Sucker
- FP Unit
- FP Polymer ball

and
- FP Filter

In the pod plate you will find
- FP Large gasket
- FP Center hole gasket

Alu FLIP-POD™
has an accurate, defined workpiece surface. Height tolerance is only 50µ. They are suitable for face machining on both surfaces, especially of metallic workpieces.

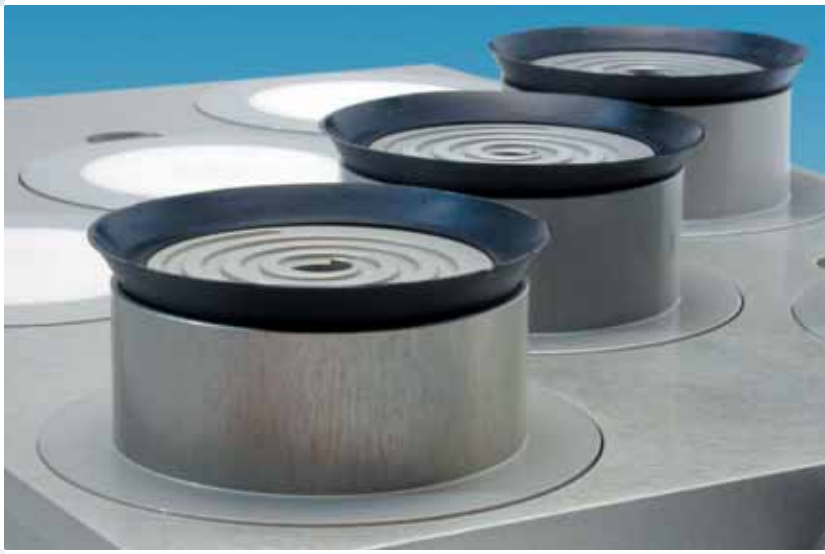

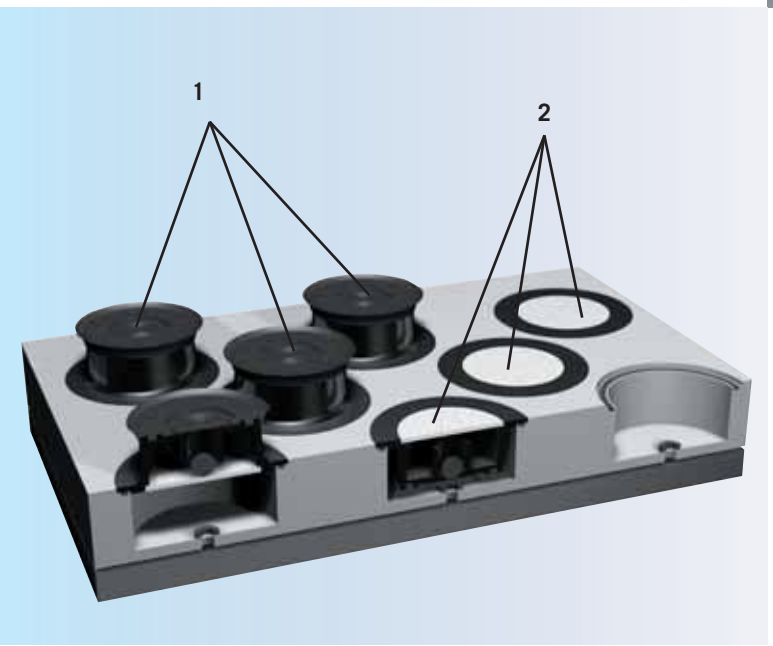

Function
The round polymer pods (1) protrude out of the pod plate when in use.
The pods not required lie in a recess cavity (2) of the pod plate.
Simply flipping them over activates or deactivates the pods.
The valve ball which stops the vacuum supply when the pod is resting, opens the valve and the vacuum system is activated.
All active pods stand 27mm above the pod plate surface, allowing contour milling and recess cutting on the outer contours.

FP Basic unit

complete

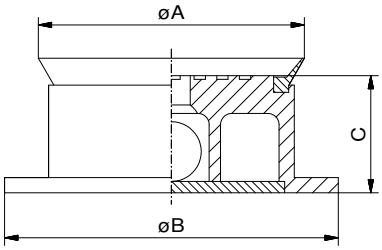

Nr.	A	B	C	Mat	g
84408	70	88	31	Aluminium	170
14384	70	88	31	Polymer	100

Supply includes:

- FP Seal
- FP Ball
- FP Filter

FP Seal

for Alu-Pod

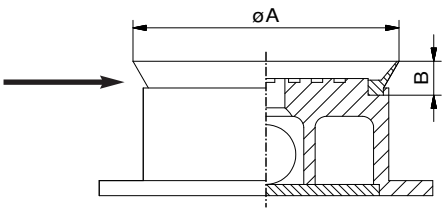

Nr.	A	B	g	g
30584	70	9		6

FP Polymer Ball

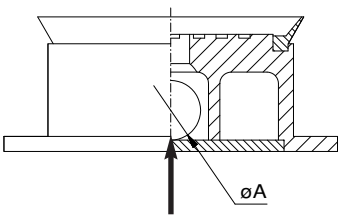

Nr.	A			g
12124	15,8			10

FP Filter

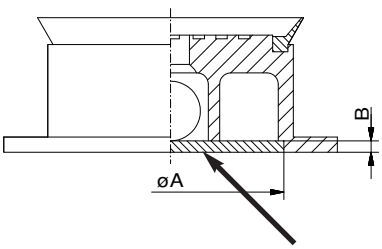

Nr.	A	B		g
12125	61	3		14

FP Large seal

for Pod Plate

Nr.	A	B		g
11395	88	4,5		65

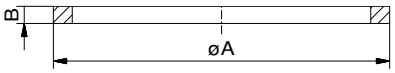

FP Center hole gasket

for pod cavity

Nr.	A	B		g
11394	28	6		1

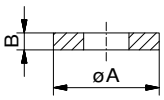

Pod -Plate, ready for use,
with ALU FLIP-POD™s

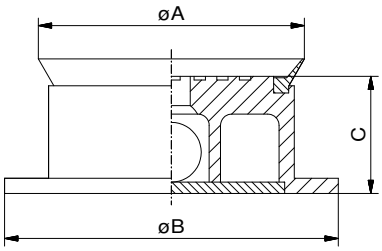

FLIP-POD™ Sets

polymer version

Nr.	Description	Area/Grid	Pods (N)	kg
83100	FLIP-POD™ Set 100	1m²/100mm	100	10,2
83200	FLIP-POD™ Set 200	2m²/100mm	200	20,2
83300	FLIP-POD™ Set 300	3m²/100mm	300	30,2
83400	FLIP-POD™ Set 400	4m²/100mm	400	40,2

The sketches show a range of possible pod panel designs.

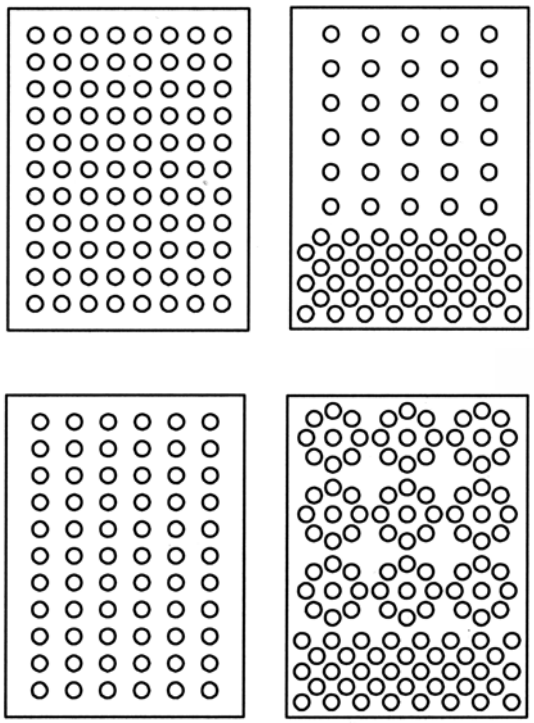

The user can choose a panel design that best suits the parts being machined. The pod panel can be laid out in almost any design and combination.

Supply includes:

- Basic unit with lip seal
- FP Center hole gasket
- FP Large seal
- 3 Retractable locator pod
- 2 Fixed locator pods

FP Lift ring

1/2“

Nr.	A	B		g
11396	88,5	12,7		65

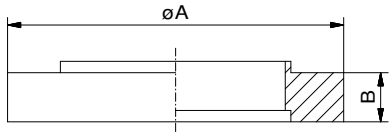

FP Transfer Pod

Nr.	A	B	C	Dg	E	F	g
85662	88,9	874	50,8	30	51	55,9	230

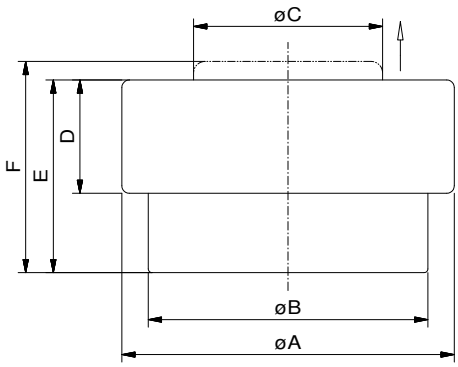

Acts as spacer when positioning large workpieces, raised ring retracts when vacuum is applied

FP Half Pod (1/2)

Nr.	A	B	Mat	g
85328	88	30,9	Aluminium	150
82138	88	30,9	Polymer	95

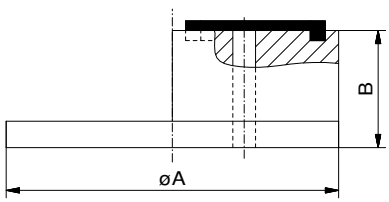

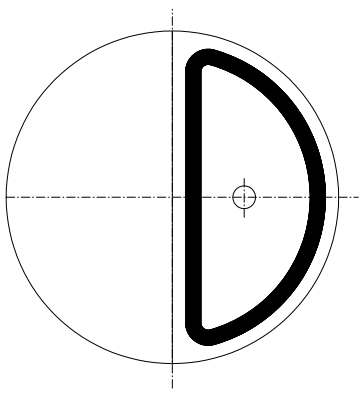

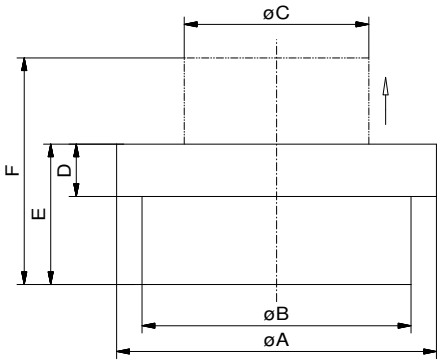

FP Retractable locator pod

automatically retract when vacuum is applied

Nr.	A	B	C	D	E	F	g
82136	88,9	74	50,8	14,4	38,6	62,3	252

Retract function of upper section when vacuum switched on

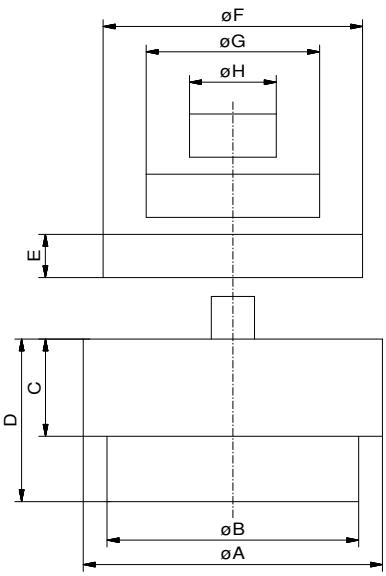

FP Fixed locator pod

incl. unit, pins and spacer disks

Nr.	A	B	C	D	E	F	G	H	g
82137	88,9	74	28,6	47,8	12,7	76,3	15	25,5	476

Fixed and retractable locator pods ensure high accuracy. Locator pods are available in both fixed and retractable versions, either of which fit in any pod cavity. After positioning the workpiece the retractable pods are drawn back into the pod plate as soon as vacuum is switched on, allowing a free path for the cutting tool.

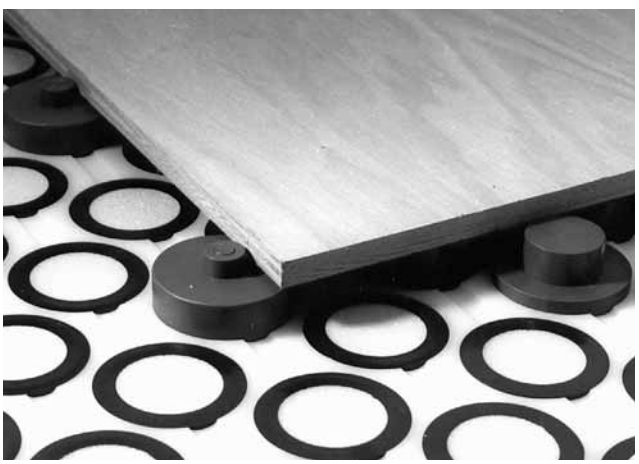

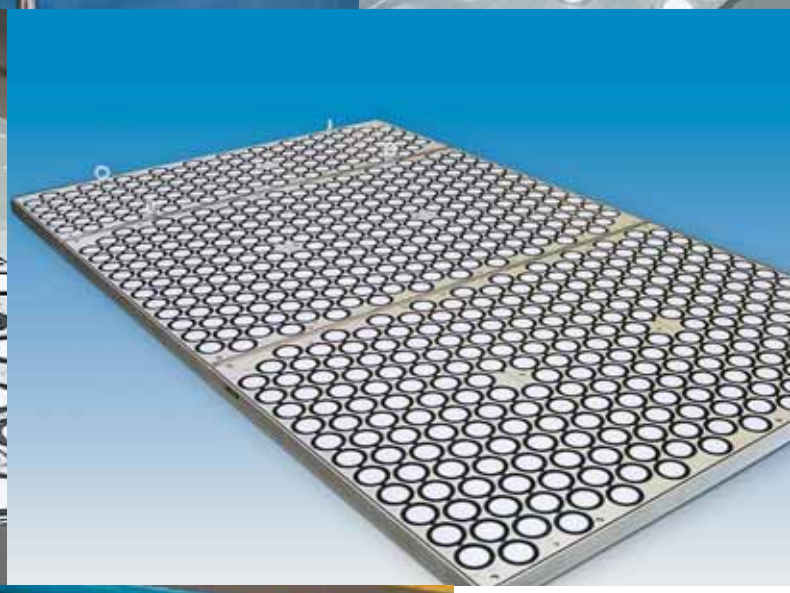

Various Flip-Pod™ applications in different industries i.e. aircraft and carriage building

Convex vacuum fixture with a backing along the length for clamping aircraft wing parts during friction-stir welding

Concave vacuum fixture for clamping fuselage parts for friction-stir welding process

3D vacuum fixture for fixation of pre-formed aluminium parts. Complex contours are milled and cutouts held securely while under the influence of vacuum downforce.

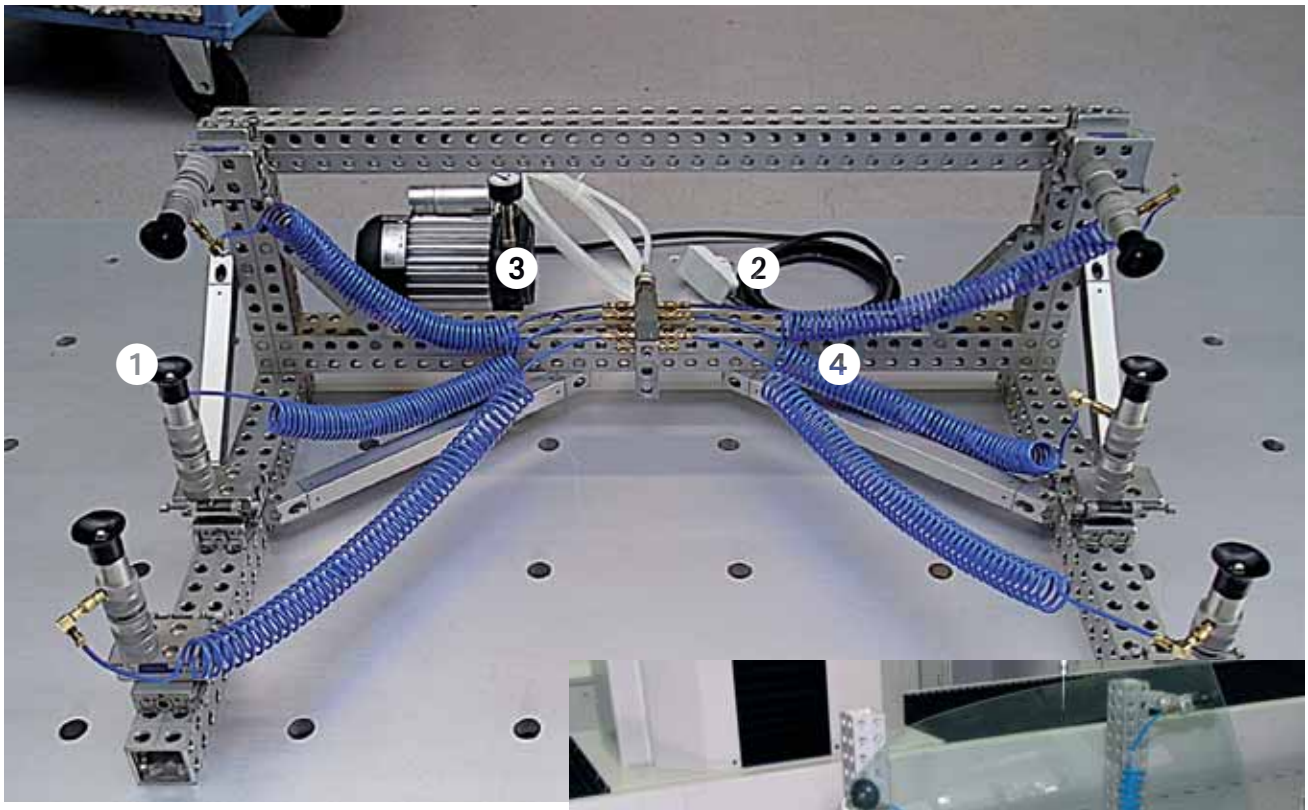

Vacuum measuring fixture with Suction pad (1), Disributor block (2), Vacuum pump (3), and Spiral suction hose (4)

Vacuum clamping systems

For measuring processes

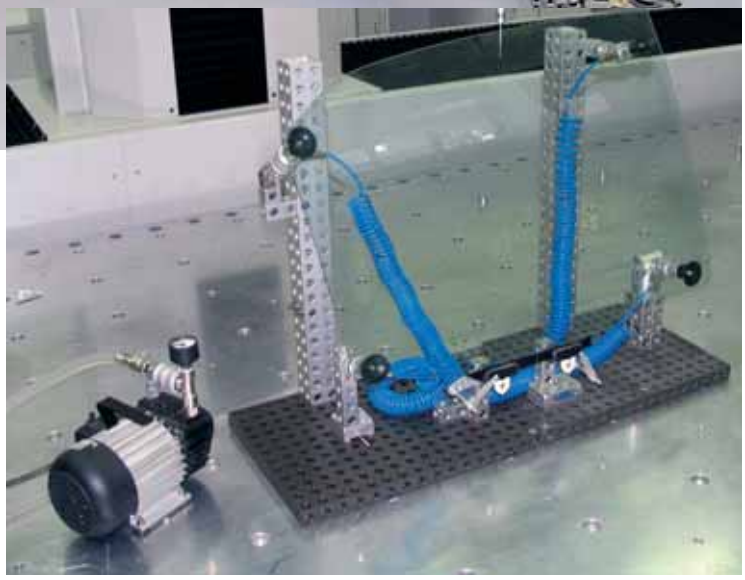

Gentle clamping process for glass!

Fast clamping for complex shaped parts

Suction pad with convex surface

Nr.	A	B	C	D	g
80157	69,5	M24X1	20	NW 2,5	59
80159	69,5	M24X1	40	NW 2,5	88

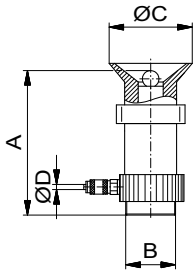

Distributor block

complete with 8 pcs quick couplings type 20 and two further optional connectors

Nr.	A	B	C	D	E	g
80161	25	100	NW 2,5	LW 18/12	LW 8/6	287

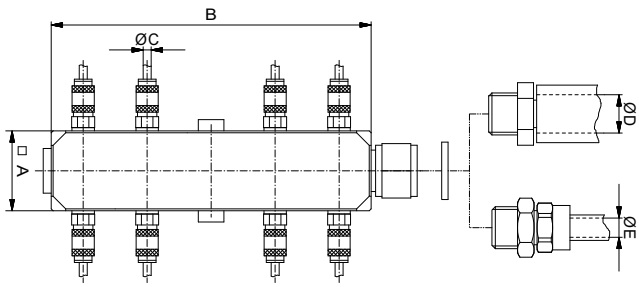

Vacuum pump

230V/50Hz, complete with handle, quick coupling and 1,5m suction hose

Nr.	hxbxl	suction cap.	kg
99170	120x120x240	5m³/h	8

Spiral suction hose

with connector socket for quick coupling type 20

Nr.	m	
81029	2,5	990

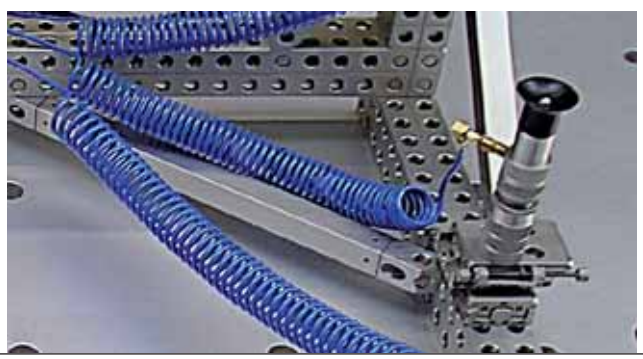

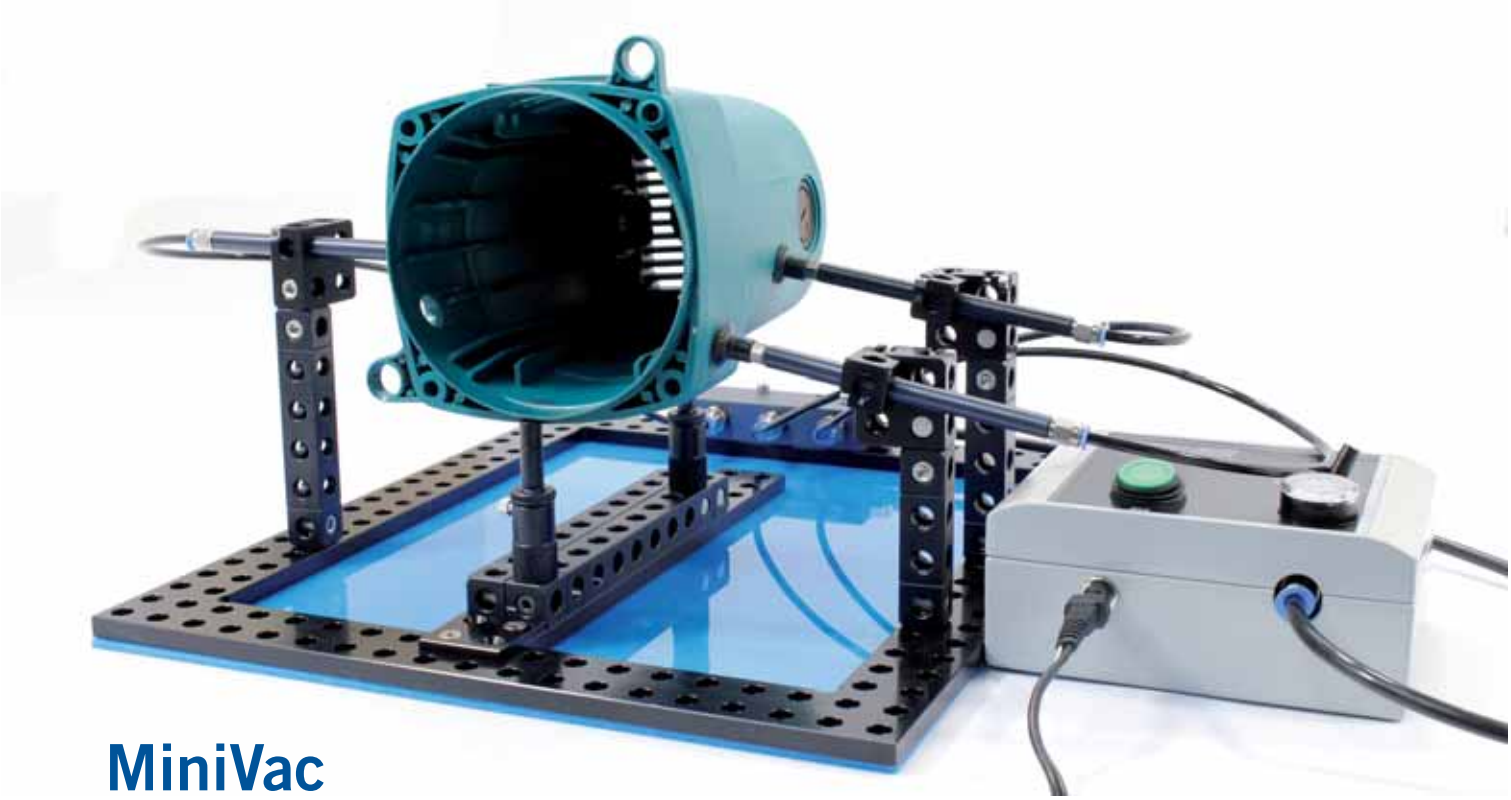

MiniVac

For measuring processes

The MiniVac vacuum pump supplies air intake for up to 6 suckers using a minimum of space. An integrated tank with pressure difference switch prevents an abrupt drop in vacuum (and in worst case release of workpiece) and avoids pump running continuously.

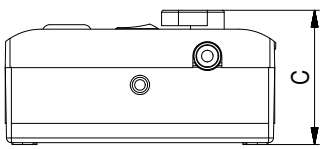

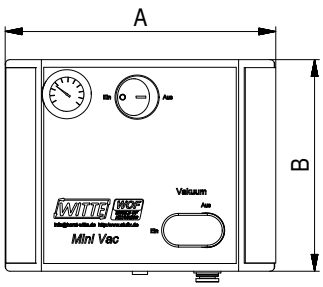

Operation via 220V power pack, integrated on/off switch with light display, vacuum switch and manometer. Double function membrane pump, max. 90° volume, 3500ccm/h. tank approx. 150ccm.

MiniVac pump

3500cm³/h

Nr.	A	B	C	
284752	140	110	70	480

MiniVac Distributor

with 6 connections inc. 1m connection hose to vacuum pump

Nr.	A	B	C	
284753	90	47	20	180

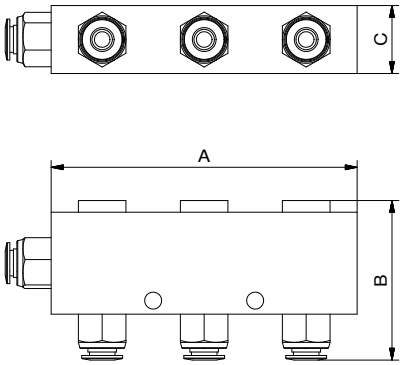

MiniVac Sucker

comprising: tube, sucker, connector

Nr.	A	B	C	g
284391	100	10	8	20

The suckers have a standard diameter of 10mm and are made of NBR.
Other materials, dimensions, forms (i.e. oval) on request.

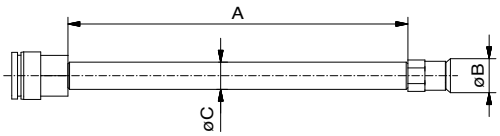

MiniVac – Suction hose

In PU, blue

Nr.	D	L	
00958	6x1	1m	17

Miniature vacuum station for universal use in i.e. medical technology. Controls, energy module and testing sensors enable very accurate adjustment and monitoring of operational vacuum

Vacuum Base

for measuring arm

Measuring arm secured in seconds

This universal vacuum base is the ideal partner for measuring arms.
A battery operated miniature pump creates sufficient vacuum so that the base sucks itself on to all kinds of surfaces in seconds.
Control display, lamp indicators and pressure switch ensure safe and secure mounting. Operating and control lights are integrated into the compact design.
Holes in the top surface allow mounting of adapter rings (not included) for measuring arms of leading manufacturers.
The Witte vacuum base requires no additional equipment. Applications away from other energy sources are possible.
A special seal even allows mounting on curved surfaces, which expands application possibilities considerably.

Description:
Vacuum Base
Item number:
282446-A
Dimensions:
ca. Ø 260 x 80mm
Weight:
5,6Kg
Holding force:
max. 4200Newton
(at sea level)
Charger:
Voltage from 100 to 240 Volt

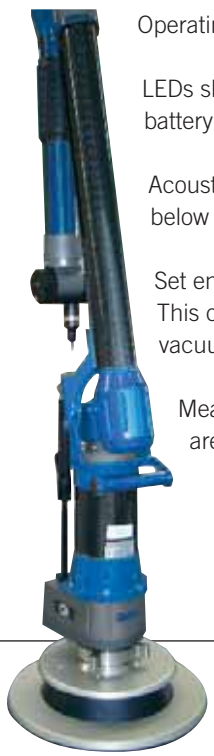

Operating voltage of charge 12 Volt

LEDs show loading condition of battery

Acoustic signal when vacuum drops below set level

Set end vacuum 200mb absolute
This corresponds to relative end vacuum of 80%

Measuring arm and adapter ring are not included.

Contents and user details.

1. ON / OFF switch
2. Indicators for battery charging levels
   Red / Yellow / Green
3. Vacuum indicator dial
4. Threaded bores for the different types of measuring arms
5. Battery charger input plug
6. Vacuum release screw
   (Take care to support measuring arm when screw is released)
7. Seal on Vacuum plate base

Six steps on how to operate:

1 - Place plate on clean worksurface.
2 - Make sure vacuum release screw (6) is closed
3 - Switch on using ON/OFF switch
(wait 5 seconds for vacuum to reach operating mode)
4 - Check battery status red/yellow/green LED'S
5 - Vacuum dial gage (3) value must show 0,7 – 0,8

Vacuum supply, overview

Vacuum units

Modular vacuum units

Compact vacuum units

Vacuum workstations

Vacuum pumps

Liquid ring pumps

Vacuum Supply

Pumps
Units
Workstations

Application
We have vacuum pumps available of different types to meet each individual need.
Sizes and capacities vary from 5m³/h bis 250m³/h and more to guarantee optimal vacuum clamping whatever the circumstances

Advantages
- Reliable in continuous operation
- Easy to maintain
- Modular unit has integrated liquid separator
- Space saving assembly for easy access
- Integrated air filter, safety valve
- Witte repair service with spare parts in stock
- Pumps from 5m³/h to over 500m³/h, also on request dry running pumps
- Liquid ring pumps run on regular machining coolant, pump temperature is regulated by an integrated radiator

Handling
- Small light pumps available according to individual need
- Integrated vacuum storage tank
- Different voltages available
- Castors available for mobility in workshop area
- Easy access for emptying liquid separator

Choosing a vacuum unit or pump

Depending on your operation Witte offers different vacuum supply systems:

Handheld pumps / Pumps
are standard, almost all of which can be used together with our liquid separators if fluids are involved and sucked in during machining process
▶ page 68

Vacuum units
In addition to the pumps mentioned above the vacuum units also have an **additional vacuum tank** as well as various safety devices.
▶ page 70

Modular vacuum unit
In addition to the pump and tank the modular vacuum units also have an **integrated liquid separator** and various safety devices
▶ page 72

Liquid ring pumps
These pumps are highly recommended when **large amounts of cooling fluids** are sucked in during the machining process
▶ page 74

Selection of vacuum supply depending on dimension of clamping surface :

Area	Suction-capacity	Type	No.
<1200 cm²	5 m³/h	Vacuum pump	**99170**
<1500 cm²	10 m³/h	Vacuum pump	**95969**
	10 m³/h	Vacuum unit	**81010**
	10 m³/h	Vacuum unit	**81011**
	10 m³/h	Modular unit	**80172**
	10 m³/h	Modular unit	**80173**
<5000 cm²	16 m³/h	Vacuum pump	**82116**
	16 m³/h	Modular unit	**82146**
<1 m²	21 m³/h	Vacuum pump	**80078**
	21 m³/h	Vacuum unit	**80000**
	21 m³/h	Modular unit	**80175**
	25 m³/h	Liquid ring pump	**93801**
<2 m²	63 m³/h	Vacuum pump	**80126**
	63 m³/h	Modular unit, mobile	**82150**
	65 m³/h	Liquid ring pump	**93803**
<3 m²	100 m³/h	Vacuum pump	**84410**
	100 m³/h	Liquid ring pump	**93804**
<4,5 m²	160 m³/h	Vacuum pump	**84412**
	160 m³/h	Vacuum unit, mobile	**84414**
	232 m³/h	Liquid ring pump	**93807**
	250 m³/h	Vacuum pump	**84413**
	250 m³/h	Vacuum unit, mobile	**84208**

FLIP-POD™

Each m² of FLIP-POD™ surface requires 60-100 m³/h vacuum suction capacity

Witte VAC-MAT™

No. of Mats	Required suction capacity
1	3 - 6 m³/h
≥ 8	16 - 21 m³/h
≥ 20	40 - 63 m³/h
≥ 50	100 - 160 m³/h

Choosing vacuum supply according to working conditions

Working conditions	Dry machining	Working with fluids
Small clamping area, Small loss of vacuum Low machining forces	 Handheld pump	 Handheld pump with liquid separator
▼ Larger clamping area, Higher loss of vacuum, Higher machining forces	 Vacuum Unit	 Vacuum unit with liquid separator
▼ Large clamping area High loss of vacuum High machining forces	 Liquid ring pump	 Liquid ring pump
▼ Very large clamping area Very high vacuum loss Very high machining forces	 Modular vacuum unit	 Vacuum workstation
	 Mobile modular vacuum unit	 Vacuum unit, mobile, with automatic liquid separator

Modular vacuum units and workstations are available with or witout liquid separator

Vacuum pumps

Oil lubricated vacuum pumps offer the following advantages:

- Air-cooled, therefore do not require coolant
- Highly reliable
- Low operating costs
- Good resistance to condensation
- Integrated oil mist separator, oil filter, check valve on suction side with sieve

Vacuum pump

220-240 V working voltage, dry lubricated

Nr.	m³/h	Volt	Hz	End press.	Kw	RPM	DB	Oil	A	B	C	D	E	F	
99170	5m	220-240	50	150 mbar	7,5	3000 ¹/min	63	-	272	153	200	90	71	M6	8

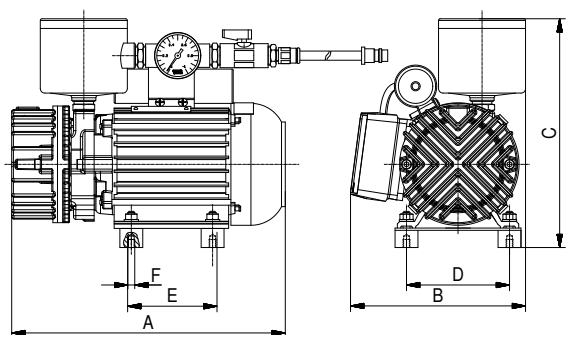

99170
Vacuum pump 5m³/h

Supply includes
- 1 pce connection unit comprising:
- 2m vacuum hose
- 3/2 way aerated valve
- 1 vacuummeter

All vacuum pumps can be used with 60 Hz

Vacuum pump

230/400 V working voltage

Nr.	m³/h	Volt	Hz	End press.	Kw	RPM	DB	Oil	A	B	C	D	E	F	G	
95969	10	230	50	20 mbar	0,37	3000 ¹/min	59	0,3l	301	234	297	100	83	150	M8	24
281548	10	400	50	20 mbar	0,37	3000 ¹/min	59	0,3l	301	234	297	100	83	150	M8	24
82115	16	230	50	20 mbar	0,55	3000 ¹/min	60	0,3l	301	234	297	100	83	150	M8	10,3
82116	16	400	50	20 mbar	0,55	3000 ¹/min	60	0,3l	301	234	297	100	83	150	M8	10,3
80156	21	230	50	20 mbar	0,75	3000 ¹/min	62	0,5l	401	223	254	131	127	210	M8	22
80078	21	400	50	20 mbar	0,75	3000 ¹/min	62	0,5l	401	223	254	131	127	210	M8	22

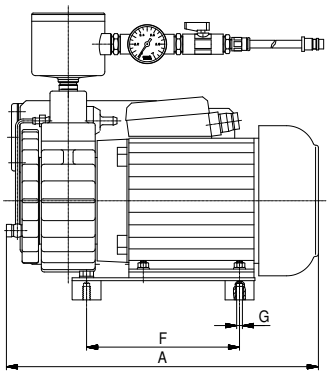

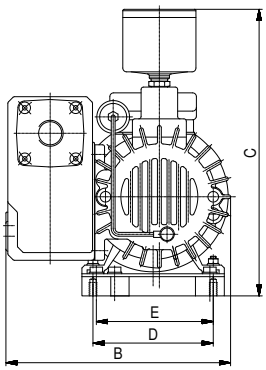

82115
Vacuum pump 16m³/h

Vacuum pump

400 V working voltage

Nr.	m³/h	Volt	Hz	End press.	Kw	RPM	DB	Oil	A	B	C	
80126	63	400	50	2 mbar	1,8	1500 ¹/min	64	2l	640	406	435	62
84410	100	400	50	2 mbar	2,2	1500 ¹/min	65	2l	699	406	435	80
84412	160	400	50	2 mbar	4	1500 ¹/min	70	3l	920	536	555	150
84413	250	400	50	2 mbar	7,5	1500 ¹/min	72	6,5l	1000	581	555	200

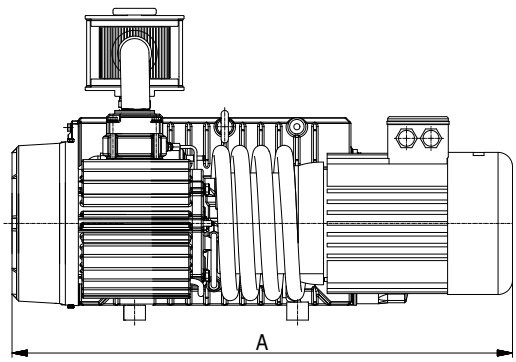

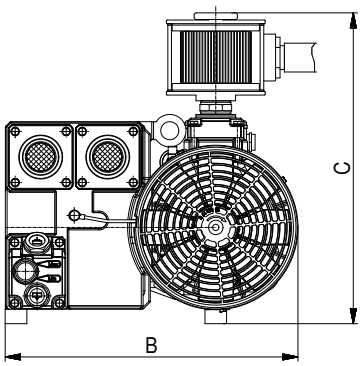

84413
Vacuum pump 250m³/h

Supply includes
- 1 pce connection unit comprising:
- 2m vacuum hose
- 3/2 way aerated valve
- 1 vacuummeter

All vacuum pumps can be used with 60 Hz

Vacuum units

Operating vacuum required can be produced in many ways.
Witte vacuum units feature the following:

- Oil lubricated vacuum pumps with an end vacuum rate of 20mbar absolute at full suction capability of i.e. 10 m³ upto 250 m³ per hour
- Integrated pressure difference switch, which automatically switches the vacuum pump on or off thereby ensuring vacuum during machining but avoiding unnecessary idle running
- Protection switch which protects electric motor from overheating
- Air filter which protects pump from dirt (made of acrylic glass with exchangeable air filter cartridge)
- Careful assembly of compatible components guarantee trouble-free and almost maintenance-free operation of Witte vacuum units in many applications
- Drainage screw for coolants which have been sucked in
- 3m connecting cable with CEE or Schuko plug

85323
Vacuum unit 16m³/h

Witte vacuum unit with U tank

230/400 V working voltage

Nr.	m³/h	Volt	Hz	End press.	Kw	RPM	DB	Oil	A	B	C	
81010	10	230	50	20 mbar	0,37	3000 ¹/min	59	0,3l	555	315	327	19
81011	10	400	50	20 mbar	0,37	3000 ¹/min	59	0,3l	555	315	327	19
85323	16	230	50	20 mbar	0,55	3000 ¹/min	60	0,3l	555	315	327	15
85324	16	400	50	20 mbar	0,55	3000 ¹/min	64	0,3l	555	315	327	15
80165	21	230	50	20 mbar	0,75	3000 ¹/min	62	0,5l	555	315	327	38
80000	21	400	50	20 mbar	0,75	3000 ¹/min	62	0,5l	555	315	327	38
80001	63	400	50	20 mbar	1,8	1500 ¹/min	65	2l	800	500	500	105

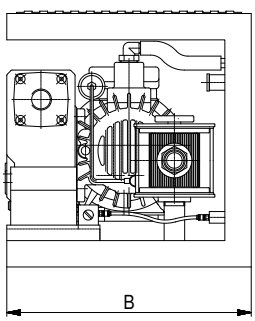

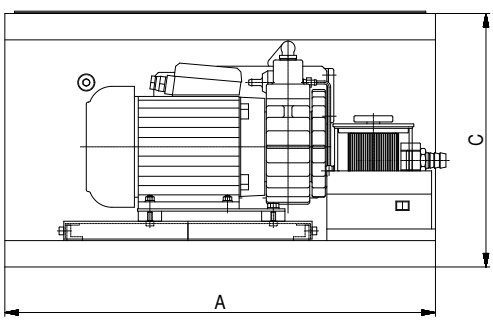

Supply includes
- 1 pce connection unit comprising:
- 2m vacuum hose
- 3/2 way aerated valve
- 1 vacuummeter

All vacuum pumps can be used with 60 Hz

Witte vacuum unit

400 V working voltage, mobile

Nr.	m³/h	Volt	Hz	End press.	Kw	RPM	DB	Oil	A	B	C	
92302	100	400	50	2 mbar	2,2	1500	65	2l	1000	800	1274	210
84414	160	400	50	2 mbar	4	1500	70	5l	1000	800	1274	337
84208	250	400	50	2 mbar	7,5	1500	72	6,5l	1000	800	1274	337

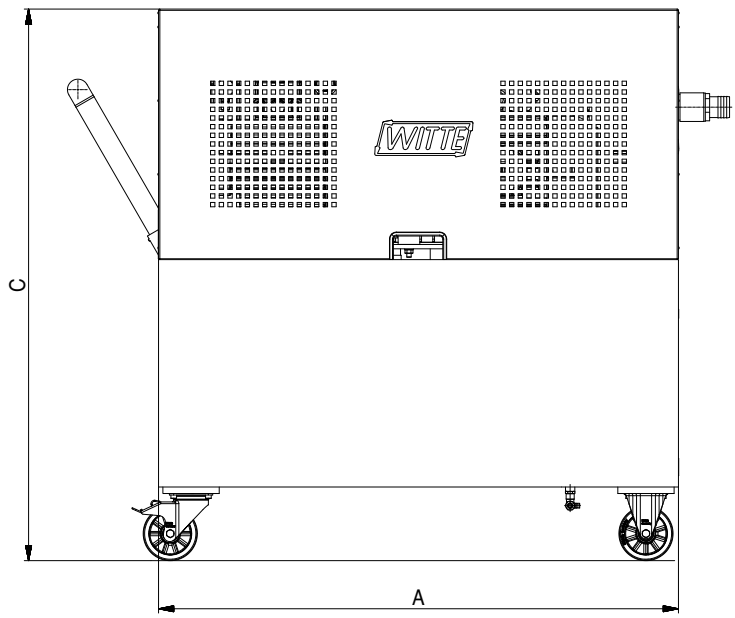

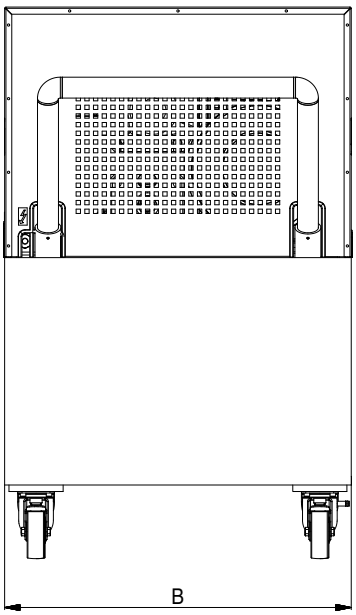

Supply includes
- 1 pce connection unit comprising:
- 2m vacuum hose
- 3/2 way aerated valve
- 1 vacuummeter

All vacuum pumps can be used with 60 Hz

Modular vacuum units

Advantages:

- Vacuum storage unit and liquid separator are integrated - an additional liquid separator is not required
- Space saving assembly of all components
- See-through unit for liquid separator and vacuum storage unit all in one means safety "at a glance"
- Different storage volumes possible simply by changing acrylic glass cylinder
- Integrated air filter, drain separator, overvoltage relay, pressure difference switch
- Available with different pump types from 6 m³ to 63 m³, on request also available with dry running pumps

Modular vacuum unit

230/400 V working voltage

Nr.	m³/h	Volt	Hz	End press.	Kw	RPM	DB	Ölfüllung	A	B	C	D	
80172	10	230	50	20 mbar	0,37	3000 ¹/min	60	0,3l	ø320	360	650	460	32,5
80173	10	400	50	20 mbar	0,37	3000 ¹/min	60	0,3l	ø320	360	650	460	32,5
82147	16	230	50	20 mbar	0,55	3000 ¹/min	60	0,3l	ø320	360	620	460	29,1
82146	16	400	50	20 mbar	0,55	3000 ¹/min	60	0,3l	ø320	360	620	460	29,1
80174	21	230	50	20 mbar	0,75	3000 ¹/min	62	0,5l	ø320	420	620	460	32,2
80175	21	400	50	20 mbar	0,75	3000 ¹/min	62	0,5l	ø320	420	620	460	32,2

Supply includes
- 1 pce connection unit comprising:
- 2m vacuum hose
- 3/2 way aerated valve
- 1 vacuummeter

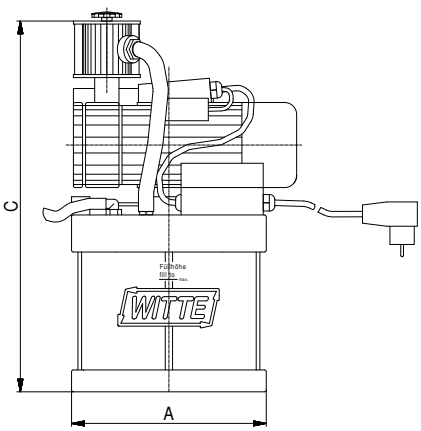

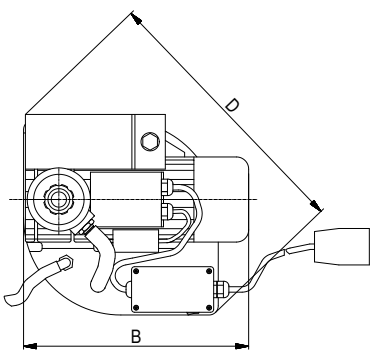

All vacuum pumps can be used with 60 Hz

Modular vacuum unit

400 V working voltage

Nr.	m³/h	Volt	Hz	End press.	Kw	RPM	DB	Oil	A	B	C	kg
82150	63	400	50	2mbar	1,8	1500 ¹/min	64	2l	640	640	1055	118
83467	100	400	50	2mbar	2,2	1500 ¹/min	65	2l	640	640	1055	132

Supply includes
- 1 pce connection unit comprising:
- 2m vacuum hose
- 3/2 way aerated valve
- 1 vacuummeter

82150 Modular vacuum unit, 63m³/h

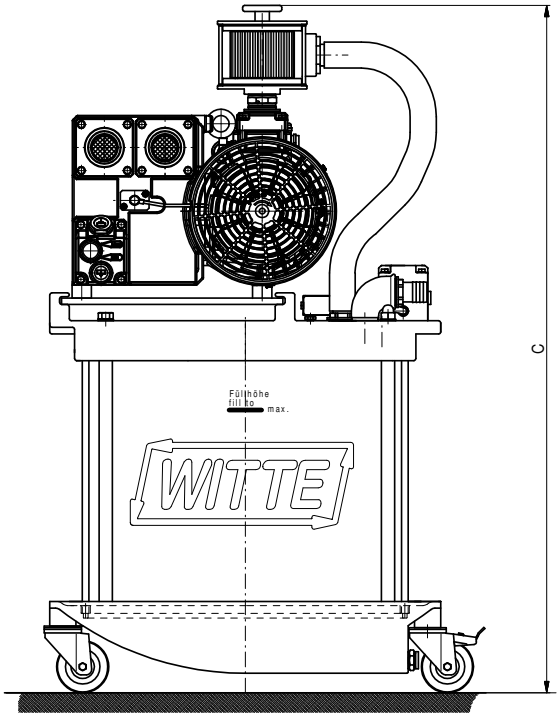

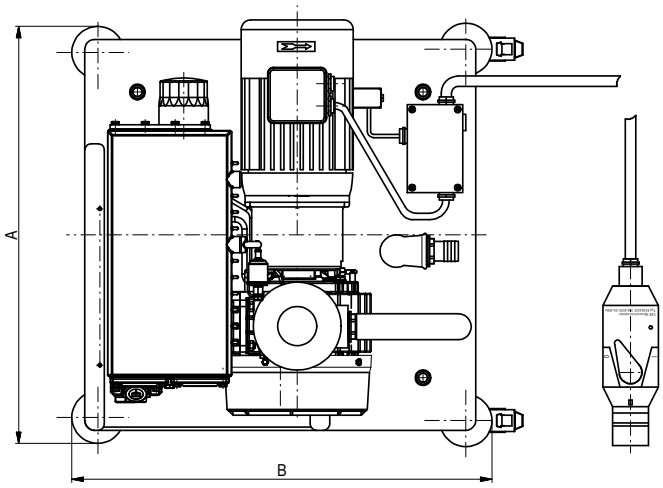

All pumps in modular units have oil lubrication. Dry running vacuum pumps for modular units are available on request

All vacuum pumps can be used with 60 Hz

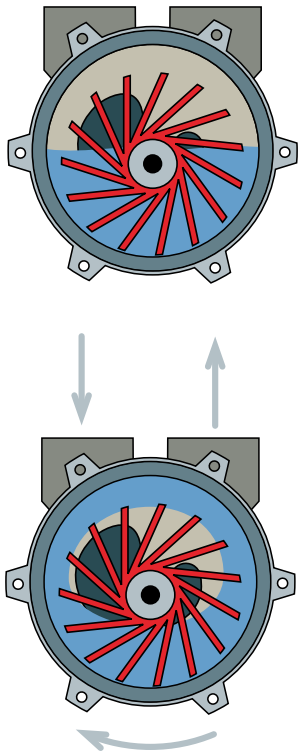

Liquid ring vacuum pumps

Only one unit for vacuum supply and liquid separation

These robust pumps, are low on wear-and-tear and maintenance, work at up to 50 mbar vacuum and do not need an additional liquid separator.
A fast turning impeller causes water in the pump to rotate (see picture on left) simultaneously sealing itself off the impeller. A washable filter and a patented condenser clean the air being sucked in before it enters the pump. Cooling lubricant is integrated into pump's operating cycle and a valve allows removal of excess fluid which can be returned to tool machine whilst in operation.
An air chiller protects the unit from overheating.

- a Liquid ring vacuum pump
- b Suction filter
- c Condenser
- d Motor
- e Chiller
- f Fluid reservoir
- g Level indicator
- h Operation selection
- i Drain plug
- k Valve
- m Air release valve
- n Shockproof plug

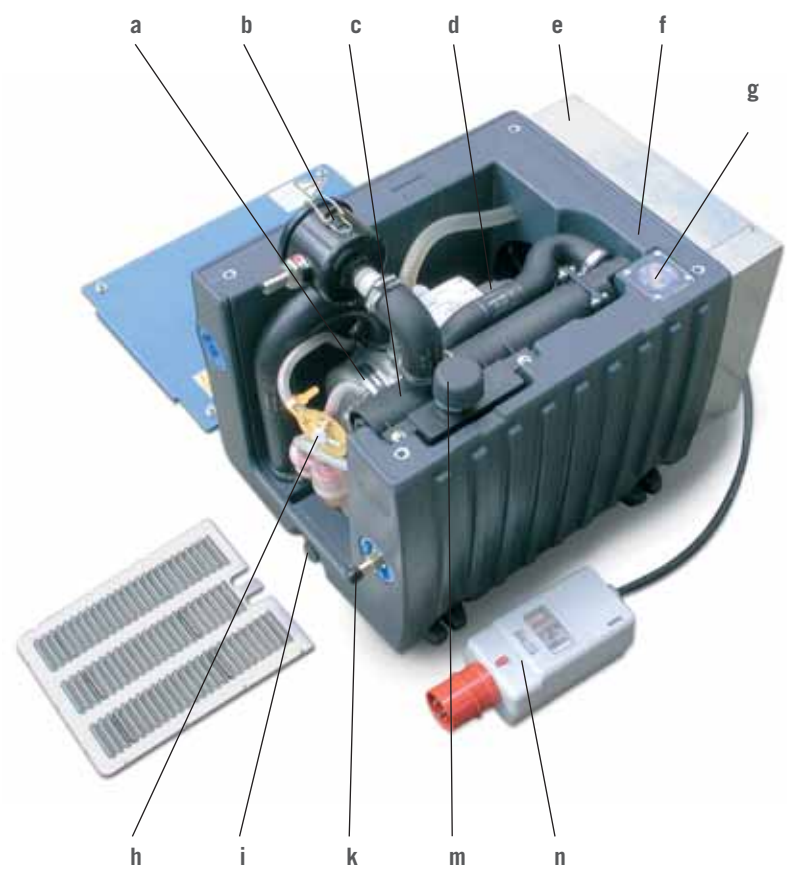

Liquid ring vacuum pump

Nr.	m³/h	Volt	End press.	Kw	DB	Hz	A	B	C	
93801	22	400	150-50 mbar	0,83	66	50	463	432	602	45,5
93802	48	400	150-50 mbar	1,2	70	50	515	572	743	57
93803	65	400	150-50 mbar	2,4	74	50	515	572	743	72
93804	100	400	150-50 mbar	3,85	77	50	525	620	920	110
93805	150	400	150-50 mbar	4	74	50	710	845	1100	200
93806	198	400	150-50 mbar	5,5	76	50	710	845	1100	220
93807	232	400	150-50 mbar	7,5	73	50	710	845	1100	240

Supply includes
- 1 pce connection unit comprising:
- 2m vacuum hose
- 3/2 way aerated valve
- 1 vacuummeter

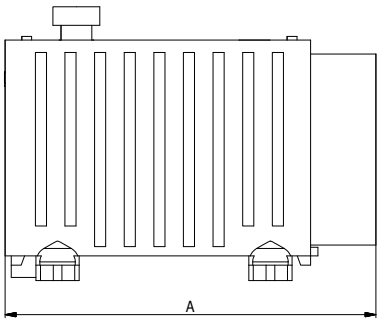

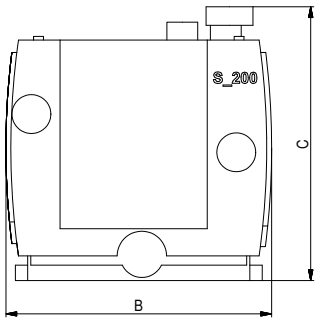

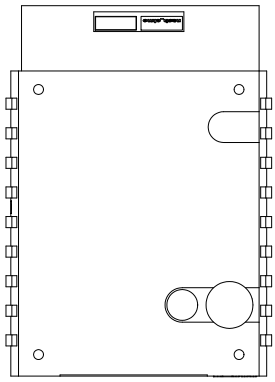

Liquid ring vacuum pump – Accessories

Nr.	Description	for pump	Version	g
13468	Air filter element 3µm, polyester	Type 22	Washable	79
13469	Air filter element 3µm, polyester	Type 45-100	Washable	330
13470	Air filter element 3µm, polyester	Type 150-198	Washable	368
13471	Air filter element 3µm, polyester	Type 232	Washable	480
13534	Water filter (exchange in pairs)	all	Washable	40

All vacuum pumps can be used with 60 Hz

Vacuum workstations

Vacuum workstation for mobile use in the workshop, with integrated vacuum pump, liquid separator, 3-fold vacuum distributor, connectors and gauges

- Vacuum storage tank, pressure difference switch and safety appliance guarantee a triple safety factor
- Solid steel design on castors, with drawers for vacuum chucks and accessories
- Vacuum workstations have oil lubricated vacuum pumps

Vacuum workstation

Nr.	m³/h	Volt	Hz	End press.	Kw	RPM	dB	Ölfüllung	A	B	C	
81045	21	400	50	20 mbar	0,75	3600 ⅟min	62	0,5l	1155	645	1072	205
81046	63	400	50	20 mbar	1,8	1500 ⅟min	62	2l	1155	645	1072	215

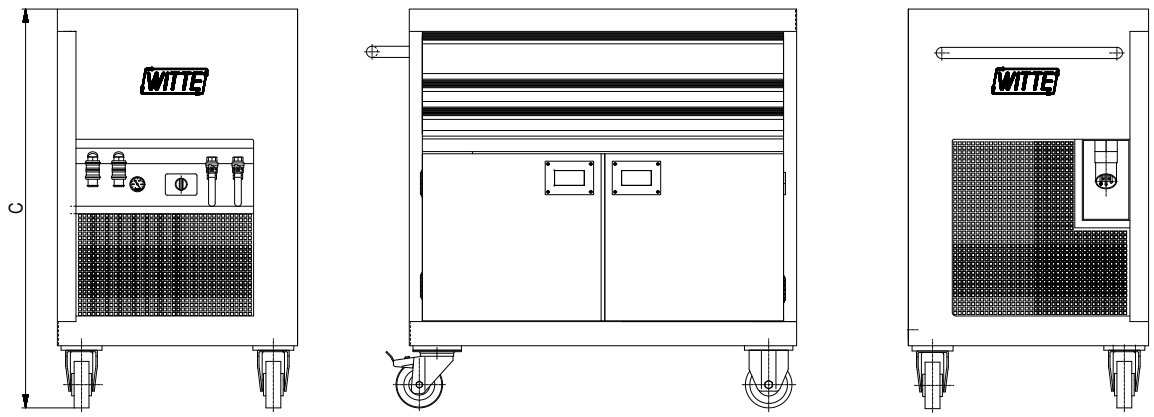

Supply includes
- 1 maintenance kit
- 5l liquid separator
- 10m wire spiral hose
- 1 safety switch
- 5m electric cable with CE plug 10 A

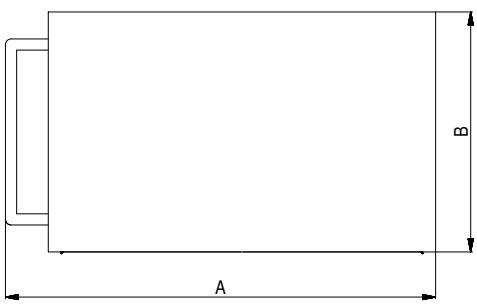

Supply includes
- 1 pce connection unit comprising:
- 2m vacuum hose
- 3/2 way aerated valve
- 1 vacuummeter

All vacuum pumps can be used with 60 Hz

Additional vacuum tank

Nr.	A	B	C	Connection	V	
80410	555	315	325	Inner thread G ¾”	54l	25,6
80379	800	500	530	Inner thread G ¾”	210l	65

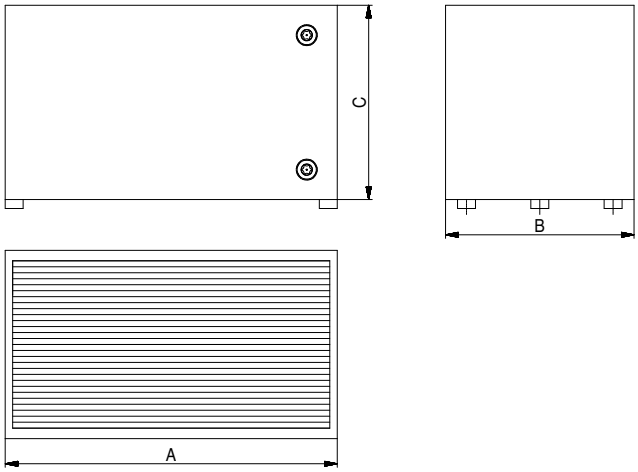

- for increasing vacuum storage volume of units
- acts as additional filter and separator for dirt or fluid
- reduces actual running time of vacuum pump

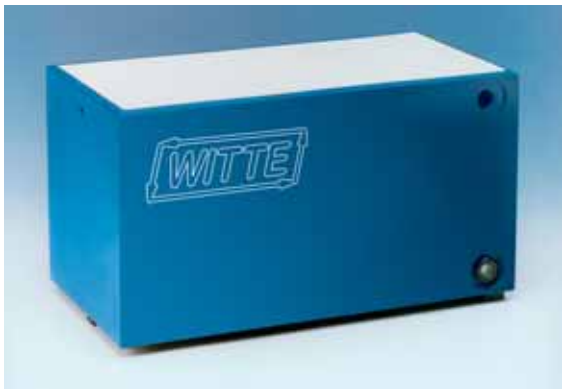

The tank is equipped with two viewing glasses.
Dirt and fluid can be seen and drained immediately.

Maintenance and service kits

Maintenance and service kits for regular care of vacuum units and pumps

For pump/unit with suction capacity	Wear parts kit	Service kit	Gasket kit
10m³/h - 16m³/h	**280711**	**82151**	**280721**
21m³/h	**280712**	**80416**	**280722**
63m³/h - 100m³/h	**280713**	**80417**	**280723**
160m³/h	**280714**	**280698**	**15202**
250m³/h	**280715**	**280699**	**15205**
Comprising of:	Wear parts, Gaskets	Filter elements, gaskets, oil	Gaskets

Maintenance and service can be carried out on site with these kits.

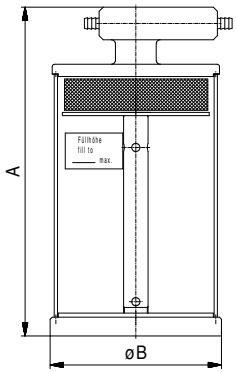

Liquid separator, small

Nr.	A	B	Vol./Capacity	Connection	
80200	403	210	9/5l	ø 12	4,5

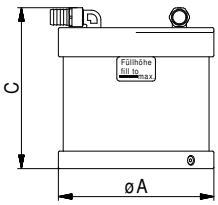

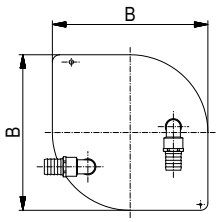

Liquid separator, medium

Nr.	A	B	C	Vol./Capacity	Connection	
82392	320	320	340	13/9l	ø 32	8,9

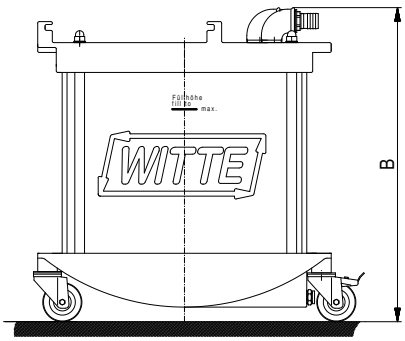

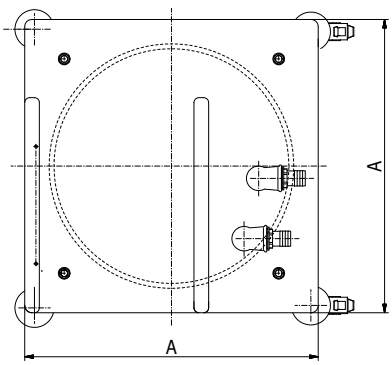

Liquid separator, large

Nr.	A	B	Vol./Capacity	Connection	kg
94953	600	645	72/50l	LW32	40

Automatic liquid separator

Nr.	V(l)	l/h	m³/h	LW in	LW out	A	B	C	D	E	
80155	3,5	100	bis 100	G 1¼“	G 1¼“	685	400	360	175	M8	8,5
82782	9,5	100	160-250	G 2 “	G 2“	950	410	340	290	M8	15

Fully automatic operation is guaranteed with an integrated magnetic valve and 2-chamber system. The separator is set up between vacuum chuck and pump, thereby protecting vacuum pump from the large amounts of fluid, which are absorbed and Fluids, which are sucked in, are transported back to the machine by means of a hose system.
Clamping of the workpiece is not interrupted at any time. Electricity supply of 230V is necessary for operation. Also available in 110V/60 Hz version.
We advise using the reducer connections (page 93) and hose nozzles (page 94) suitable for your vacuum hose diameter. Two are required for each part, one in and one out of the automatic liquid separator These parts are not included and need to be ordered separately!

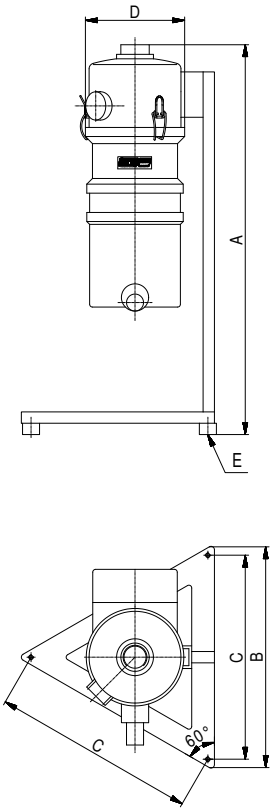

Stand filter

Nr.	V(l)	l/h	m³/h	LW in	LW out	A	B	C	D	E	
15039	25	100	bis 100	59,6	G 1½“	685	400	360	175	M8	8,5
15285	25	100	160-250	59,6	G 2“	950	410	340	290	M8	15

15039 Filter STF 0250 with fleece insert
For separation of fluids and solids out of suction medium incl. quick clean flap and fluid drainage tap

15285 Stand filter STA 250 with automatic fluid separation24 Volt DC

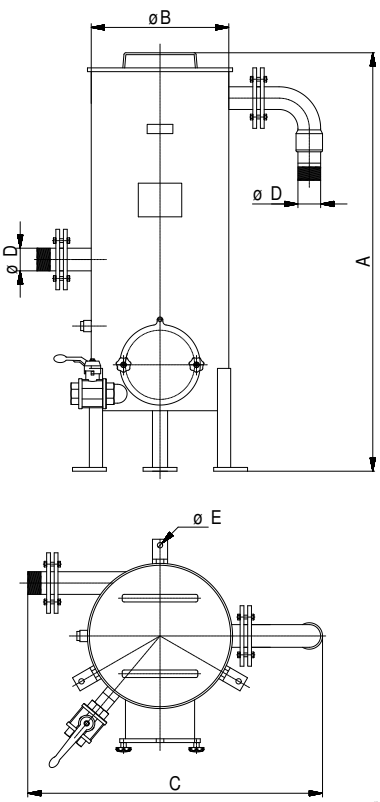

Vacuum Starter Set

enabling applications using grid or VacMat™ systems
No. 94078, Witte Vacuum-Starter-Set, ready to use

Supply includes:

No.	Pcs.	Name
95969	1	Vacuum pump, 10m³/h, 230V
81995	1	Vac-Mat adapter plate
89676	1	Modular vacuum grid chuck
11030	5	Vac-Mat – blue
11053	5	Vac-Mat – green
30617	2	Clamps for clamping onto machinetable
28331	1	Setting up tool for joining modular vacuum chucks
00070	1	10 meters O-shaped seal diameter 4 mm

For applications with coolant we recommend using a liquid separator
(page 78)

Grid vacuum chuck Starter Sets

Grid Vacuum chuck, grid size 12,5, with Venturi vacuum generator

Nr.	A	B	C	
282126	300	200	32,5	6
282127	400	300	32,5	12
282128	600	400	32,5	24

Vacuum supply made easy via compressed air (ISO 8573-1:2010) as operating medium.The integrated vacuum pump (Venturi System) requires operating pressure of 3,5-6 bar. End vacuum is 80mbar absolute (92% vacuum). The chuck has an integrated silencer to reduce noise. Chuck can be used with integrated Venturi valve or with a vacuum pump. Tools for changeover are included.

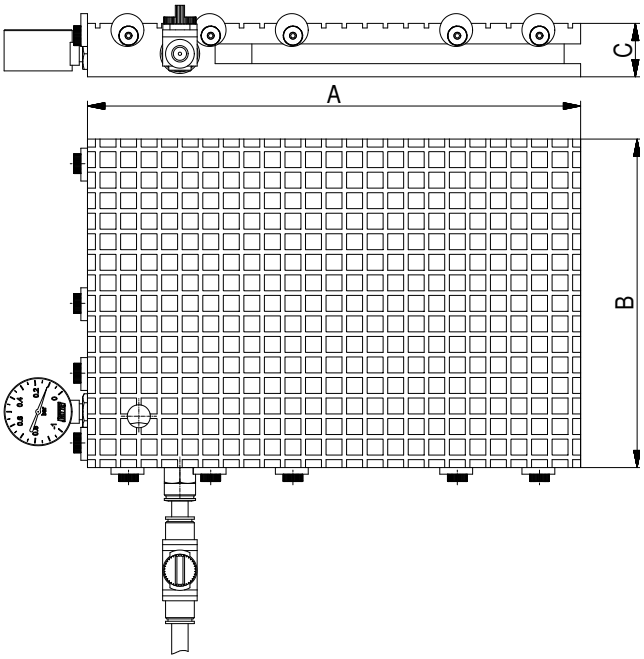

Supply includes:

- Grid vacuum chuck
- Vacuum supply (Venturi valve integrated in chuck)
- O-shaped seal ø4mm
- Pressure hose with plug connection
- 2 clamps for mounting chuck
- Tool for changeover from Venturi valve to vacuum pump

Slot vacuum chucks
Starter Set

Slot - Vacuum chuck with Venturi vacuum generator

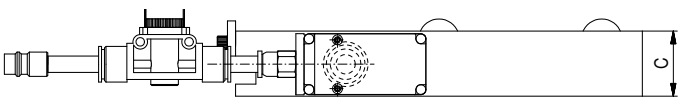

Nr.	A	B	C	D	E	F	
95167	300	200	32	209	309	30	5,3
284555	400	300	32	409	309	30	10,6
284556	600	400	32	409	609	30	21,2

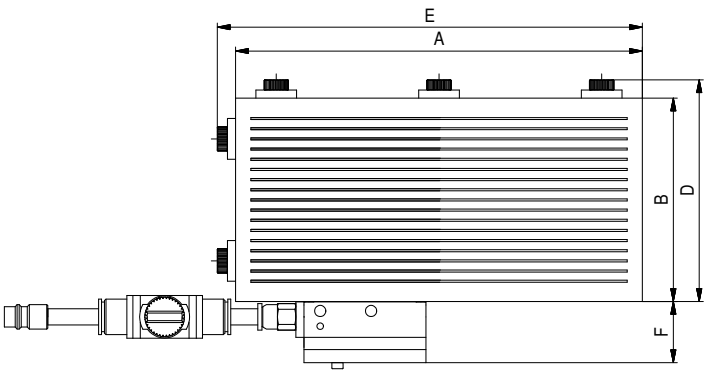

Supply includes:
- 1 Vacuum supply (venturi - nozzle)
- 2 Clamps for mounting chuck
- 1 Vacuum stopper
- 1 Rubber adapter mat
- 1 Pressure hose with quick connector for compressed air connection

1. Vacuum generation simply by using compressed air on site: The built-in vacuum pump (Venturi system) requires operating pressure of 4-6 bar.
Ultimate vacuum is is 150mbar absolute (85% vacuum).
Air consumption is 30-42 l/min. An integrated silencer reduces the noise of the escaping air.

2. Slot vacuum chuck made of aluminum alloy: In this chuck, vacuum generation is already integrated and ready for immediate use. For work piece positioning there are exentric stops located on two sides of the vacuum chuck. The rubber adapter mat is perforated by user as required and enables clamping of smaller components.
A vacuum stopper defines active vacuum area. The connection is made via a pressure hose and a plug for standard pneumatic connections.
The plates can be operated with the integrated venturi pump or a vacuum pump.

Slot vacuum chuck
Starter Set

Slot vacuum chuck with vacuum pump

Nr.	A	B	C	D	kg
284423	300	200	28	320	28
284424	400	300	28	420	33
284425	600	400	28	620	43

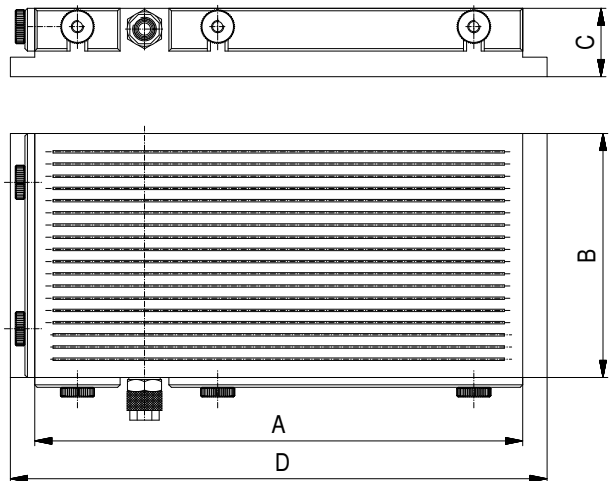

Supply includes:
- 1 vacuum pump 10m³/h, 230V
- 2 clamps for mounting chuck
- 1 vacuum stopper
- 2 rubber adapter mats, blue and brown
- vacuum suction hose
- 3/2 way aerated hand valve

Accessories and replacement materials

Replacement materials

VAC-MAT™
Page 14

Rubber adapter mat, blue
Page 30

Rubber adapter mat, red
Page 30

Rubber adapter mat, black
Page 31

Friction Booster
Page 37

Vilmill™
Page 46

O-shaped seal
Page 86

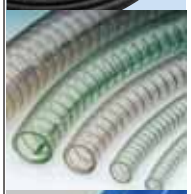

Wire spiral hose
Page 95

Polymer hose
Page 95

Polymer tubing
Page 95

Vacuum Switch with LED Display

Vacuum switch, electronic, with adjustable safety values. Used as safety switch for dry working environments.

Nr.	Maße (mm)	U	g
282703	55x30x32	24V	11

Technical data:

- Measuring range: -1 bis + 10 bar
- Process connection: G1/8
- Operating current (V): 18-32 DC
- Electricity load (mA): 100
- Compression resistance (bar): 20
- Readiness delay time (s): 0,3
- Min. reaction time switch off (ms): 2,5
- Adjustable delay time sD, dr (s): 0; 0,002...5
- Protection: IP 65
- Weight (kg): 0,106
- Display: Display unit 4 x LED green
  Switching status 2 x LED yellow

Supply includes:

- Connecting cable 5m, angled
- Operation manual

Vacuum Switch with LED Display

Vacuum switch, electronic, with comprehensive adjusting/programming possibilities. Used as safety switch for wet and explosion protected working environments.

Nr.	Maße (mm)	U	g
93937	h=92, ø33	24V	50

Technical data:

- Vacuum display, controlled electronically
- Upper and lower vacuum safety values (hysteresis) freely adjustable
- Adjustable reaction time
- Programming of switching outputs
  Hno = Hysteresis /Closer
  Hnc = Hysteresis /Opener
  Fno = Hysteresis /Closer
  Fno = Hysteresis /Opener
  (Close contact/break contact)
- Maximum overload pressure 10bar

Supply includes:

- Connecting cable 5m, angled
- Operation manual

Vacuum grease

Nr.	Description	Inhalt	g
80140	Grease	250g	350

Used from time to time for the following:

- Greasing suction hose
- Sealing off workpieces with rough or scored surface

80103
Axial connection

80100
Radial connection

Vacuum gauges

Nr.	Connection-thread	Dia-meter	Range	g
80103	G1/8“ axial	ø40	0 to -1 bar	40
80100	G1/8“ radial	ø40	0 to -1 bar	40

Used for sealing grid chucks or defining active vacuum areas. This high quality seal is placed into the slot of a grid type vacuum chuck.
The seal diameter is dependant on the cross section of the slot. If a plate is milled over then a seal with a smaller diameter will be required.

Minimum order quantity 50m/per diameter.

O-shaped seal

Nr.	Diameter
00188	ø 2,0mm
00069	ø 3,0mm
00170	ø 3,5mm
00070	ø 4,0mm
00157	ø 4,5mm
00071	ø 5,0mm

Nr.	Diameter
00171	ø 5,5mm
00072	ø 6,0mm
00172	ø 6,5mm
00073	ø 7,0mm
00251	ø 8,0mm
00316	ø 10,0mm

Manifold distributors

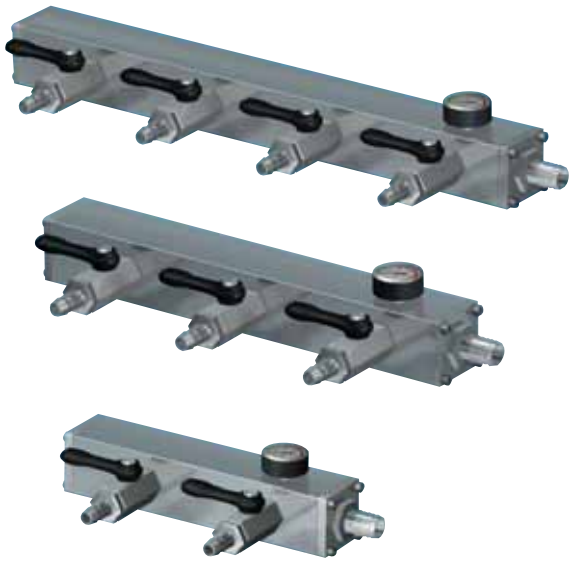

All manifolds are supplied with corresponding hose-nozzles and on each exit there is a 3/2 way aerated vacuum valve with a vacuummeter

The manifold can be upgraded to a safety appliance when assembled together with a safety pressure switch (93937 or 282703, see page 85). Connection threads R 1/8“ with blind plugs are already in place.

Nr.	A	B	C	D	kg
84389	300	43	4xLW12	1xLW18	1,7
85680	250	43	3xLW18	1xLW24	2
84390	480	84	6xLW12	1xLW25	5,6
85197	294	53	4xLW12	1xLW32	3
84391	480	84	6xLW12	1xLW32	5,9
84591	510	84	4xLW18	1xLW32	6,5
84392	765	84	6xLW18	1xLW32	6,9
89052	510	84	2xLW25	1xLW32	6,5
90134	690	84	6xLW12	1xLW50	6,9
90177	440	84	3xLW18	1xLW50	5,5
84393	510	84	4xLW25	1xLW50	6,0
90562	650	84	5xLW25	1xLW50	6,5
90527	130	84	2xLW32	1xLW50	4,6
84394	510	84	4xLW32	1xLW50	6

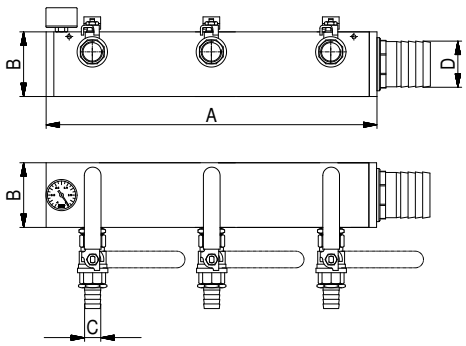

Y distributor with female thread

Nr.	Thread	Hose nozzle	g
90716	G3/8”	3 x ø12	170
90717	G1/2”	3 x ø18	900
90718	G1/2”	1 x ø18, 2 x ø12	1000

Rotation joint

max. 3500 rpm

Nr.	A	B	C	D	
80910	88	43	G1/4“	12/8	400
80261	98	43	G3/8“	12/8	400
80262	120	55	G1/2“	15/12	1300

Supply includes:
- 2,5m pipe
- Connecting parts

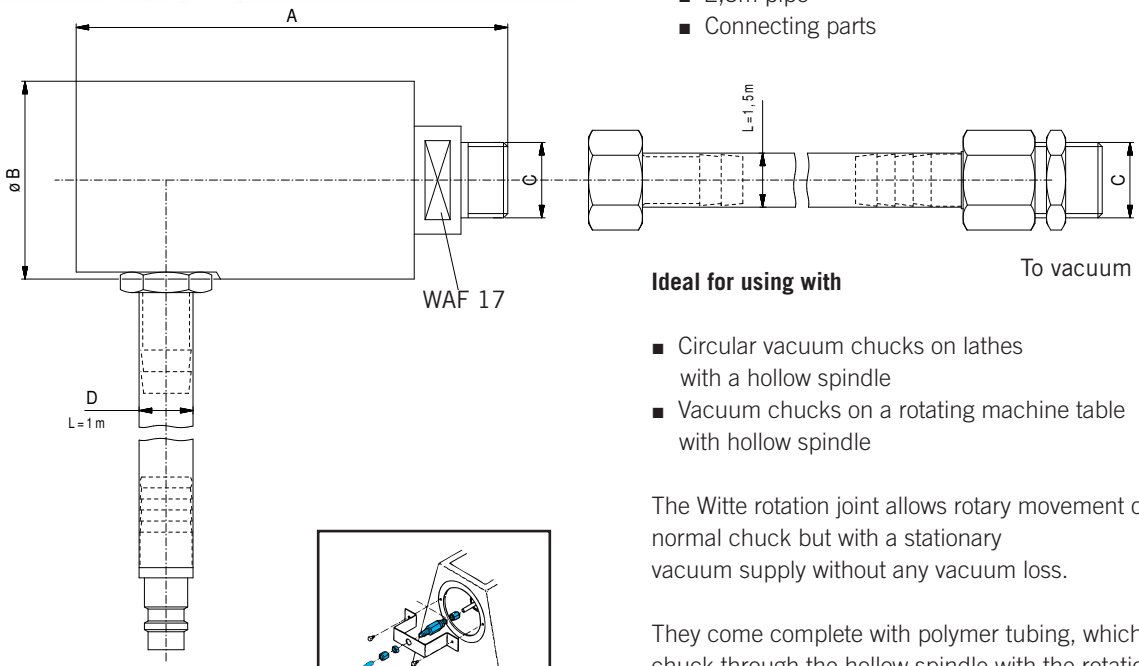

Ideal for using with

- Circular vacuum chucks on lathes with a hollow spindle
- Vacuum chucks on a rotating machine table with hollow spindle

The Witte rotation joint allows rotary movement of circular or normal chuck but with a stationary vacuum supply without any vacuum loss.

They come complete with polymer tubing, which connects the chuck through the hollow spindle with the rotation joint. It is the tubing which takes up the torque force

Connection unit

Nr.	Type	For hose dia
82291	T-shape	6mm
82292	T-shape	12mm
80102	straight	12mm
82519	straight	18mm
82952	straight	24mm
82902	straight	32mm
82953	straight	50mm

Supply includes:
- 3/2 way aerated valve
- 2m vacuum hose
- 1 vacuummeter
- 2 hose fittings

Slide valve

Nr.	A	B	C	D	E	g
81322	48	25	13	SW14	G1/8“	50
11252	58	30	16	SW17	G1/4“	85
81324	70	35	20	SW22	G3/8“	180
82961	80	40	25	SW26	G1/2“	217

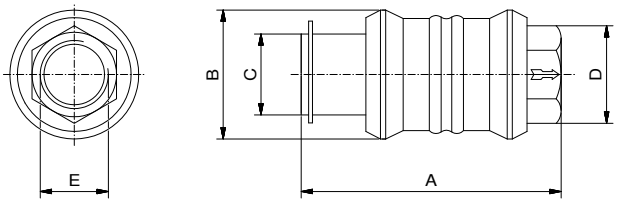

Vacuum hand valve

Nr.	Connection thread	Typ	g
85625	1/4“ female/female	-	70
80139	3/8“ female/female	-	99
13444	3/8“ female/female	mini	69
80988	1/2“ female/female	-	149
11453	3/4“ female/female	-	500
82927	1“ female/female	-	604
80563	1 1/4“ female/female	-	800
83144	1 1/2“ female/female	-	900

Foot switch

Nr.	Connection thread	
80322	G1/4“	2,4

Supply includes:
- 2 hose fittings
- 2x3m vacuum hose with wire spiral 18/12

Vacuum electro-magnetic valves

Normal open

80908/90960

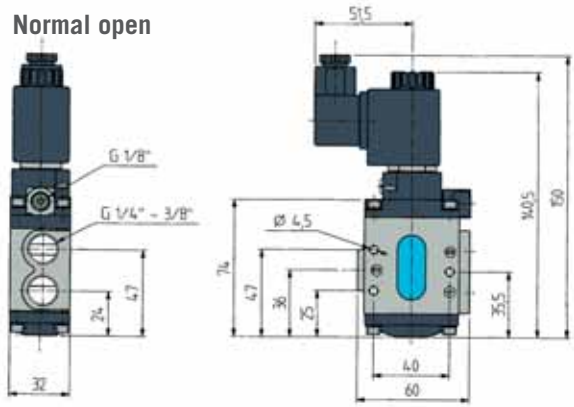

90961/84204

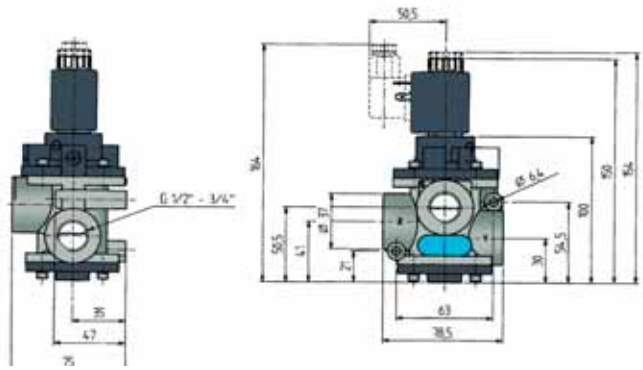

82997

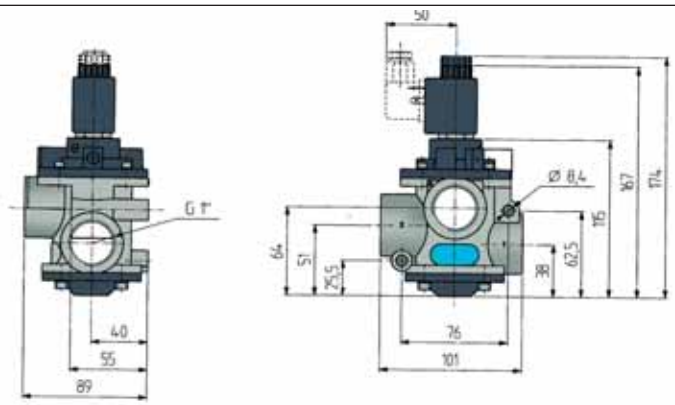

84275

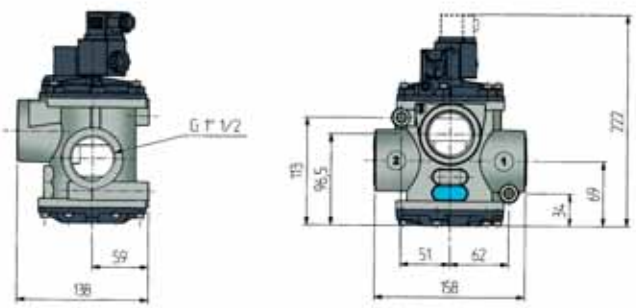

Vacuum electro-magnetic valves

Normal open

Nr.	Connection thread	Pump max. m³/h	Vacuum min.	
90960	1/4“ female/female	4	150 mbar	0,58
80908	3/8“ female/female	10	150 mbar	0,8
90961	1/2“ female/female	20	150 mbar	1,19
84204	3/4“ female/female	60	150 mbar	1,13
82997	1“ female/female	90	150 mbar	1,9
84275	1 1/2“ female/female	180	150 mbar	2

All vacuum valves are 3/2 way with ventilation. For safety reasons the electromagnetically operated vacuum valves are always open.
That means that even if the electricity is cut off, the vacuum supply hole in the valve remains open, and supply of vacuum is guaranteed. This is valid for 230 volt AC or 24 volt DC

Further dimensions available on request

Supply includes:
- 24 V DC, 11W
- Connector plug DIN43650/A
  Protection class IP 65

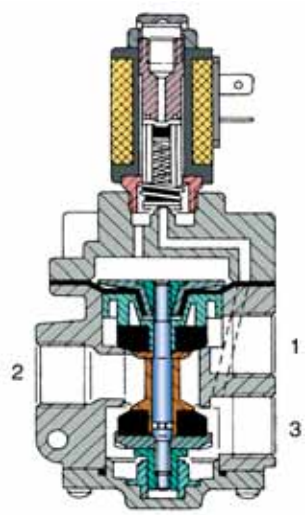

1 = Pump
2 = User / Vacuum chuck
3 = Air intake

Seals

for electromagnetic valve

Nr.	for valve nr.	g
16328	90960	9
11108	80908	9
11178	90961	14
11178	84204	14
12210	82997	80
12365	84275	80

Suitable hose nozzles / connection elements see from page 94

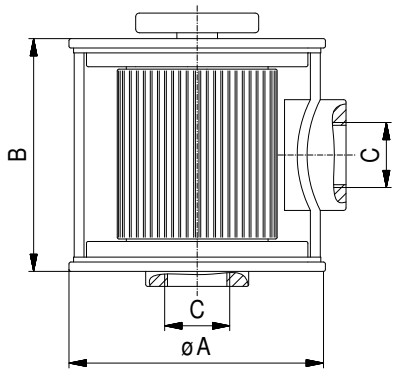

Airfilter

suction filter for vacuum pumps, units etc.

Nr.	A	B	C	Filter#	g
83324	105	110	3/4“	80142	560
83322	140	120	1 1/4“	80143	760

Universally used dust filter, dirt immediately visible through transparent housing. Designed to allow easy exchange of cartridge, whereby filter seals must also be changed.
A fitting filter cartridge is included in package.

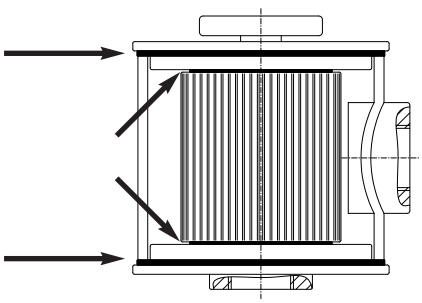

Seal

for airfilter

Nr.	pcs	size	for filter#	g
29482	1	small	83324	1
29483	1	big	83324	3
21059	1	small	83322	1
29464	1	big	83322	5

2 large and 2 small seals are required when exchanging one air filter

Screw hose connection

Nr.	Thread	for hose inner dia.	g
10632	3/8“	9	34
83322	1/2“	12	45

Double nipple

detachable

Nr.	Thread	g
10301	1/8“ male/male	9
12095	1/4“ male/male	40
12110	3/8“ male/male	52
12072	3/4“ male/male	196
11479	1“ male/male	351

Screw hose connection

for slot-type vacuum chucks

Nr.	Thread	for hose inner dia.	g
10239	1/8“	4,5	19
10414	1/4“	6	27

Reducer

male/female

Nr.	Thread male	Thread female	g
10542	1/4“	1/8“	11
10681	3/8“	1/8“	20
12113	3/8“	1/4“	100
10302	1/2“	1/8“	40
10743	1/2“	1/4“	51
10299	1/2“	3/8“	22
11455	3/4“	1/8“	51
10896	3/4“	3/8“	66
10316	3/4“	1/2“	36
12107	1“	3/8“	11
12108	1“	1/2“	90
10636	1“	3/4“	98
12109	1 1/4“	1/2“	199
12359	1 1/2“	1“	206
10637	2“	1 1/2“	229

Quick coupling

with male thread

Nr.	Thread	for plug#	g
80104	3/8“	10271 10275 10519	77
80989	1/2“	10271 10275 10519	86
80441	3/4“	12079	130

Plug

for quick coupling

Nr.	for hose inner dia.
10271	ø 6
10275	ø 8
10519	ø 13
12079	ø 19

Hose nozzles

Nr.	Thread	for hose inner dia.	WAF
11561	1/8“	ø 9	14
10638	1/4“	ø 9	17
11768	1/4“	ø 13	17
10354	3/8“	ø 9	19
10269	3/8“	ø 13	19
10270	1/2“	ø 13	24
11508	1/2“	ø 19	22
11509	3/4“	ø 19	32
11746	3/4“	ø 25	32
11726	1“	ø 25	37
10471	1“	ø 32	37
10598	1 1/4“	ø 32	50
11620	1 1/2“	ø 50	53
11468	2“	ø 50	57

Vacuum polymer tubing

used with rotation joints

Nr.	Description	Dim
17793	Vacuum tubing	ø 6/4
17794	Vacuum tubing	ø 8/5
17795	Vacuum tubing	ø 10/8
17796	Vacuum tubing	ø 12/9

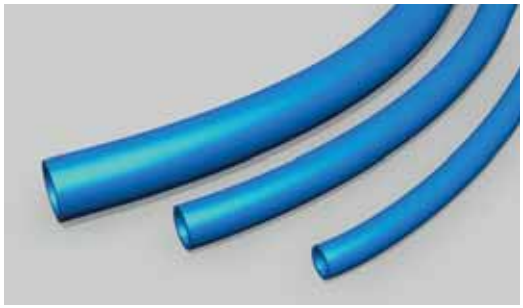

Vacuum polymer hose

Nr.	Description	Dim
00058	Vacuum hose	ø 6/8
00059	Vacuum hose	ø 8/12
00132	Vacuum hose	ø 12/15
00057	Vacuum hose	ø 6/10
00902	Vacuum hose	ø 22/18

Wire spiral hose

Nr.	Bendable radius (min)	outer / inner ø
00717	20 mm	ø 13/8
00060	25 mm	ø 18/12
00061	40 mm	ø 25/18
00253	60 mm	ø 34/25
00184	75 mm	ø 40/32
00185	125 mm	ø 60/50

Hose cross section:
Suction capacity of vacuum pumps may drop and reduce suction volume if hoses are too narrow or too long. For hose lengths from 2-3m upward we recommend using hoses a size larger or using several hoses in connection with a manifold distributor in oder to ensure the required supply cross section.

Please state length in metres when ordering

WITTE-METAPOR© - Porous aluminium

Instead of bores for vacuum and air pressure - METAPOR© for vacuum and air pressure!

This unique porous aluminium compound material is suitable for die and mould, conveyance and clamping systems

- **Evacuation**
  vacuum mould-forms made of METAPOR©
  vacuum chucks made of METAPOR© i.e.
  for clamping electronic workpieces and foils
- **Lifting**
  air film glide handling equipment
  made of METAPOR©
- **Through flow**
  for agitating bases and
  conveyor channels made of METAPOR©
- **Molding/Demoulding**
  deep drawn and die moulds
  made of METAPOR©
- **Ceramic and machined forms**
  made of METAPOR©

Deep drawn form,
made of WITTE - METAPOR©

WITTE - METAPOR© - Applications

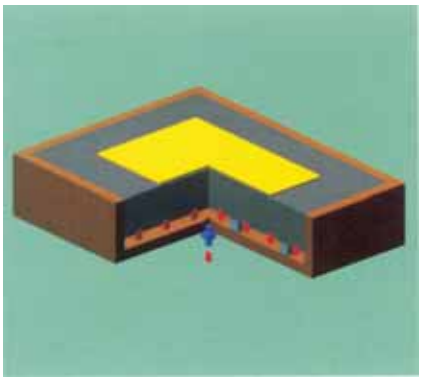

Vacuum clamping technology
The main feature of METAPOR© vacuum clamping systems is suction over the complete surface area without suction bores.
Foils are held absolutely flat. The pressure drop, which takes place within the structure means that it is not necessary to cover areas not in use. METAPOR© is ideally suited for holding foils and electronic parts as well as for mould-forms and soft workpieces.

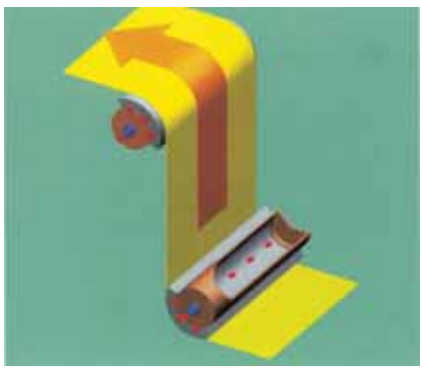

Air film glide technology
The pressure distribution in the METAPOR© structure allows even surface airflow capacity, even if only part of the surface is covered. Air consumption and noise emission are considerably reduced. Trouble-free machining offers cost reduction on air flow components, a new perspective for rotation bearings, conveyance and extrusion beds.

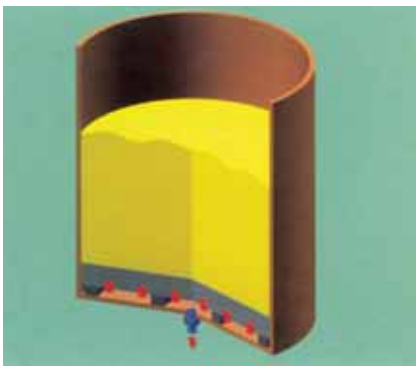

Through-flow technology
The microporous METAPOR© structure allows an even agitation of granulates and powders without bubbles ocurring. Low air consumption reduces friction and mechanical load. METAPOR© ideal for mixing processes, coating, conveyance troughs and dismantling of silo bridges

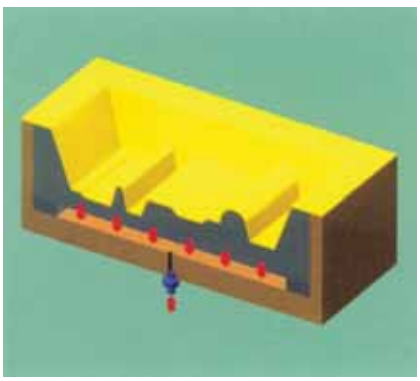

Mould technology
Deep drawn moulds made of METAPOR© do not require any bores. Bore imprints on the workpiece are avoided. Suction over the complete area allows structures to be complex without air pockets and distortions. The complete flow-through of air prevents high-temperature areas developing. Rational machining procedure and immediate usability promise a valuable technological advantage

Witte METAPOR©- material properties

METAPOR© is made mainly out of two components: Granulate (e.g., Aluminium, Ceramic) and a binder e.g., epoxy, polyester, polyurethane).
These different components influence the qualities and behaviour of the material.
For example porosity, hardness, temperature consistency, and surface finish.

The machineability of METAPOR© is excellent and can be compared to easily machineable aluminium. METAPOR© is machined without coolant in order to keep the pores clean Better surfaces are achieved with high cutting values. No noticeable warmth developing in the workpiece can be felt during machining.

METAPOR© is available in the standard sizes 500x500mm, thickness from 10 - 100mm (±0,3mm)

Larger plates
(i.e. 1m² oder 2m² glued plates
supplied on request)

METAPOR©-Materials in comparision:

	BF 100 AL	MC 100 White	CE 100 White	HD 210 AL
Porosity	15%	17%	20%	16%
Max. temp.	100°C	100°C	100°C	210°C
Strength yield	★★	★	★★★★	★★
Thermo-forming	★★	★	★	★★★
Vacuum clamping	★★★★	★★★	★★★★	★★★★
Average pore ø	approx. 15µm	approx . 25µm	< 10µm	approx . 12µm

★ –> ★★★★ = Increase in suitability

Witte METAPOR© materials

Nr.	lxbxh	
00704	500x500x10	4,0
00705	500x500x15	6,0
00706	500x500x20	8,0
00707	500x500x25	10,0
00708	500x500x30	12,0
00709	500x500x35	14,0
00710	500x500x40	16,0
00711	500x500x50	20,0
00712	500x500x60	24,0
00713	500x500x70	28,0
00714	500x500x80	32,0
00715	500x500x100	40,0

MC 100 AL

METAPOR© material
with maximum porosity

- Density: 1,7 g/cm³
- Strength yield: 25,0 N/mm²
- Max. Temp: 100,0 °C
- Thickness tol.: -0/+0,3 mm

Nr.	lxbxh	
00513	500x500x10	4,5
00552	500x500x15	6,8
00553	500x500x20	9,0
00554	500x500x25	11,3
00555	500x500x30	13,5
00556	500x500x35	15,8
00557	500x500x40	18,0
00558	500x500x50	22,5
00559	500x500x60	27,0
00560	500x500x70	31,5
00561	500x500x80	36,0
00562	500x500x100	45,0

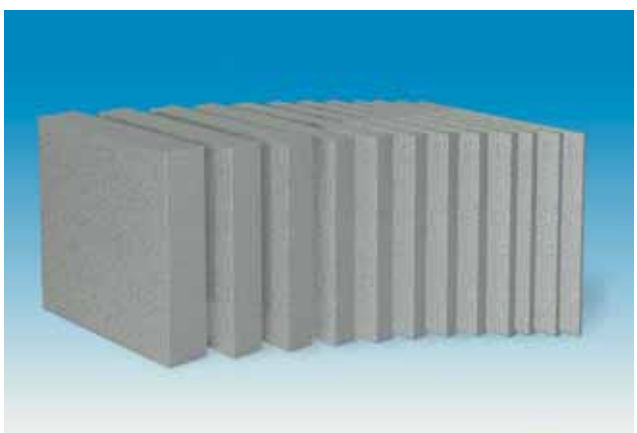

BF 100 AL

Standard quality
with good allround properties

- Density: 1,78 g/cm³
- Strength yield: 56,0 N/mm²
- Max. Temp: 100,0 °C
- Thickness tol.: -0/+0,3 mm

All dimensions are rough cut segments.
Other dimensions on request.

Witte METAPOR© materials

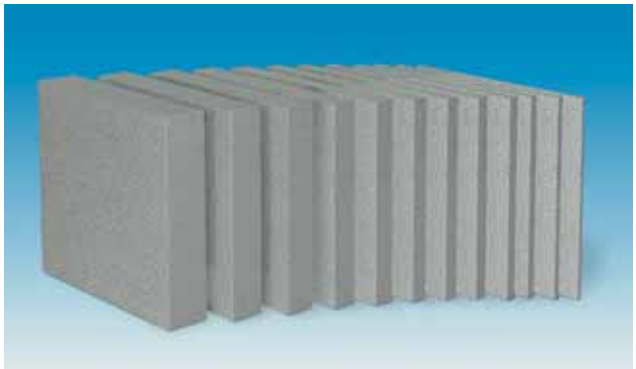

HD 210 AL

METAPOR© material
with high temperature resistance

- Density: 1,9 g/cm³
- Strength yield: 43,0 N/mm²
- Max. Temp: 210,0 °C
- Thickness tol.: -0/+0,3 mm

Nr.	lxbxh	
00244	500x500x10	4,0
00245	500x500x15	6,0
00246	500x500x20	8,0
00247	500x500x25	10,0
00248	500x500x30	12,0
00288	500x500x35	14,0
00249	500x500x40	16,0
00289	500x500x50	20,0
00250	500x500x60	24,0
00292	500x500x70	28,0
00293	500x500x80	32,0
00252	500x500x100	40,0

CE 100 White

METAPOR© material with very hard surface
properties and low porosity

- Density: 1,7 g/cm³
- Strength yield: 24,0 N/mm²
- Max. Temp: 100,0 °C
- Thickness tol.: -0/+0,3 mm

Nr.	lxbxh	
00766	500x500x10	4,0
00767	500x500x15	6,0
00768	500x500x20	8,0
00769	500x500x25	10,0
00770	500x500x30	12,0
00771	500x500x35	14,0
00772	500x500x40	16,0
00773	500x500x50	20,0
00774	500x500x60	24,0
00775	500x500x70	28,0
00776	500x500x80	32,0
00777	500x500x100	40,0

All dimensions are rough cut segments.
Other dimensions on request.

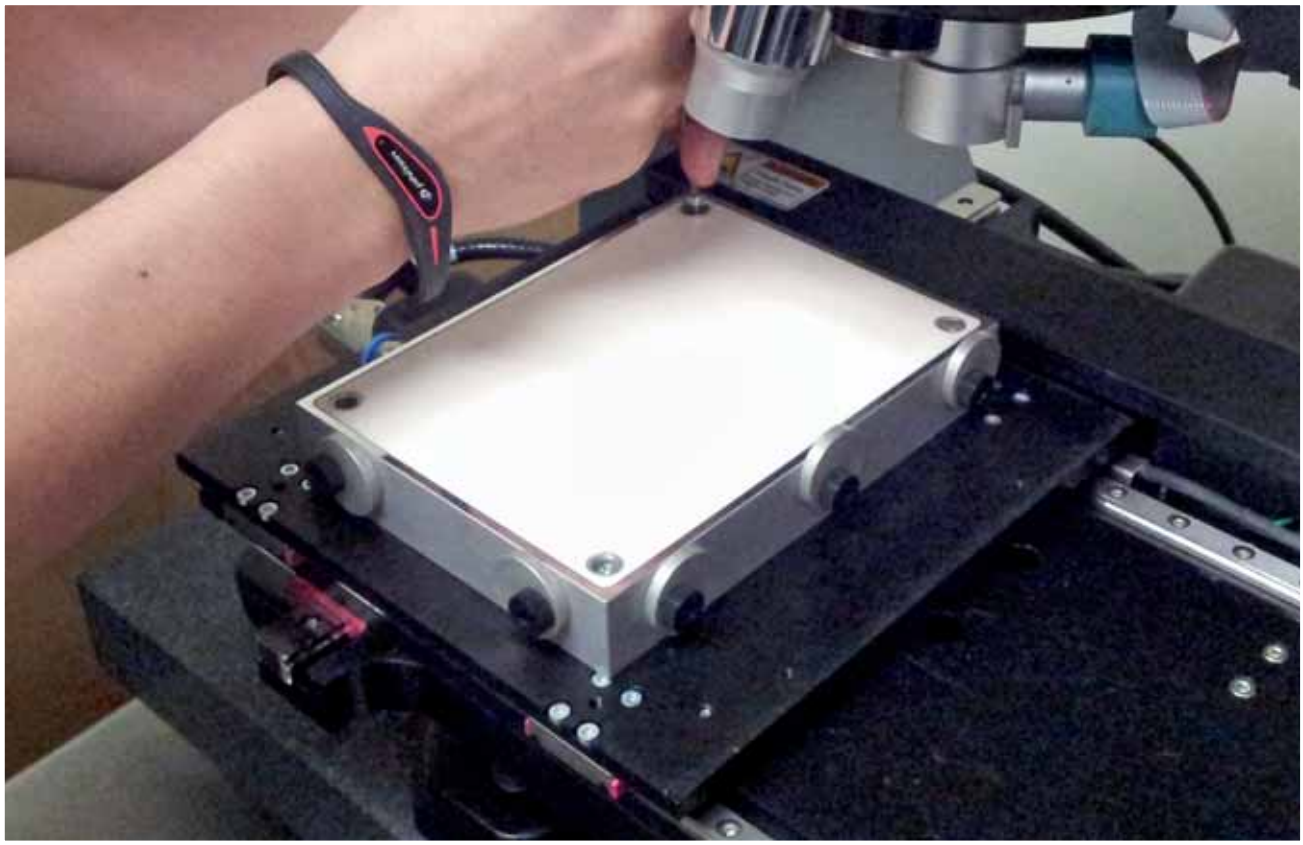

Metapor chuck in analysis application

Rotary vacuum clamping chuck with µporous clamping surface

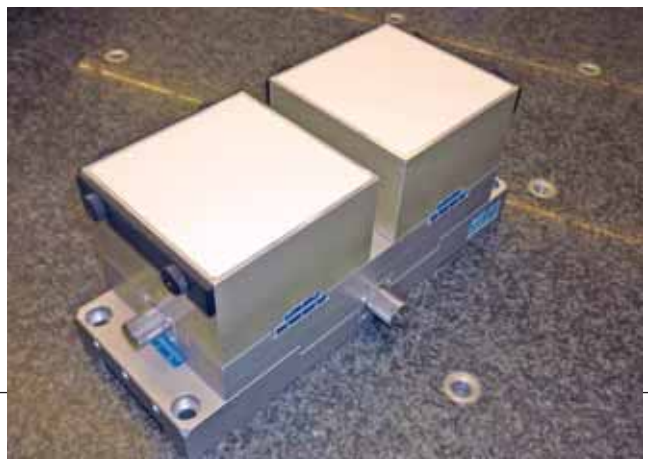

Double chuck system with two clamping surfaces which can be very accurately aligned to one another

ICEVICE© Freeze clamp technology

When to use this technology
This is ideal technology for clamping smalll or intricate workpieces without any tension yet accurately.
For machining mechanically or to separate small parts from a large unit of raw material.

Favoured by the following industries;
- Electronics / Semi-conductors
- Ceramics
- Optics, Glass / Quarz treatment
- Metals, clocks and watches
- Medical tools and laboratory equipment
- For universities and research.

Advantages
- Very precise up to ± 3µm
- No tension builds up within the workpiece
- Short clamping time +/- 90 seconds.

Handling
- Easy and quick
- With the use of workpiece specific adapter plates a high degree of repeatability in positioning and clamping is achieved

Function
- Freezing generated by compressed air
- Chuck surface in aluminium with very good warmth drawing properties
- Housing in special polymer with insulation

Clamping by freezing on a thin water film

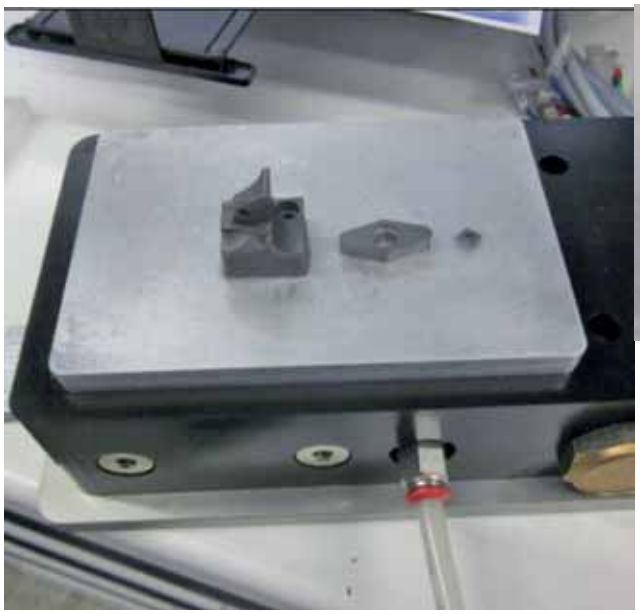

When clamping with the Ice-Vice system parts are frozen to chuck surface on a capillary film of water for machining. Even relatively uneven parts can be clamped as any gaps are filled with water.The vertical and horizontal clamping forces created are enough to hold small parts for milling, grinding, drilling or polishing.

Ice Vice Clamping System

Nr.	Dim	Clamping surf.	
282364	300x140x75	150x100	4,3
283209	300x200x100	250x150	9

Supply includes:
- 0,5m hose inside Dia 9 with connection fittings
- Plastic case with inlay

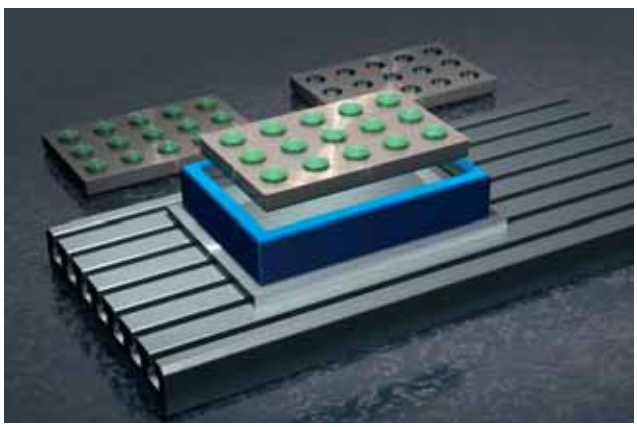

To improve production time ICEVICE© can also be palletized where a quick exchange of Freeze plates is possible. These plates have a vacuum connection to ensure secure fixation to the Icevice base.

Witte Weiguss mould clamping technology

Semi-machined workpiece is filled up with Witte Weiguss alloy

Witte Weiguss mould clamping technology is suitable for manufacturing workpieces, which cannot be clamped conventionally because support surfaces are lacking.

Application: Clamp the unmachined workpiece onto i.e. a Vac-Mat™ vacuum chuck. The top surface is milled conventionally.

The milled hollows are filled with melted Weiguss alloy, which hardens into a plane parallel surface. The workpiece is then turned around 180° and clamped securely on to the vacuum chuck. Stop pins make sure the workpiece is positioned accurately.

The finished workpiece is placed into warm water at 80°C in order to melt the alloy attached to it. The alloy does not mix with water and can be collected, remelted and used again.

Witte Weiguss LM70

Nr.		kg
94161	Weiguss- Pack to 1kg	1
92912	Weiguss- Pack to 5kg	5

Supply includes:
- CD Rom with video
- Technical information as a PDF file

Special advantages:
Witte Weiguss mould clamping method is especially suitable for complicated or spherical shaped parts.
Unlimited reuse.

Left: First step is milling workpiece conventionally

Top: Finally workpiece is placed in water at 80°C to melt and remove alloy, which can be reused

Right: Filling hollow with melted Witte Weiguss alloy

Witte Weiguss is especially suitable for complicated workpieces with curved or concave surfaces

Right: After hardening, workpiece is turned over and machined on reverse side

Machine table (3,3x11 meters) supplied with VAC-MAT™ Vacuum clamping. The photo shows the fixture at an aircraft manufacturer, where pockets are milled into a surface area covered with 468 Mats.

CNC milling machine equipped with a vacuum system used in house for precision-machining aluminium aircraft parts

Roller bar vacuum system for precision machining pre-formed aluminium sheets

Vacuum chuck for clamping bottles tops during measuring by coordinate measuring machine

2 Rotating systems (each 3500mm) with vacuum clamping areas on all four sides for machining aluminium profiles

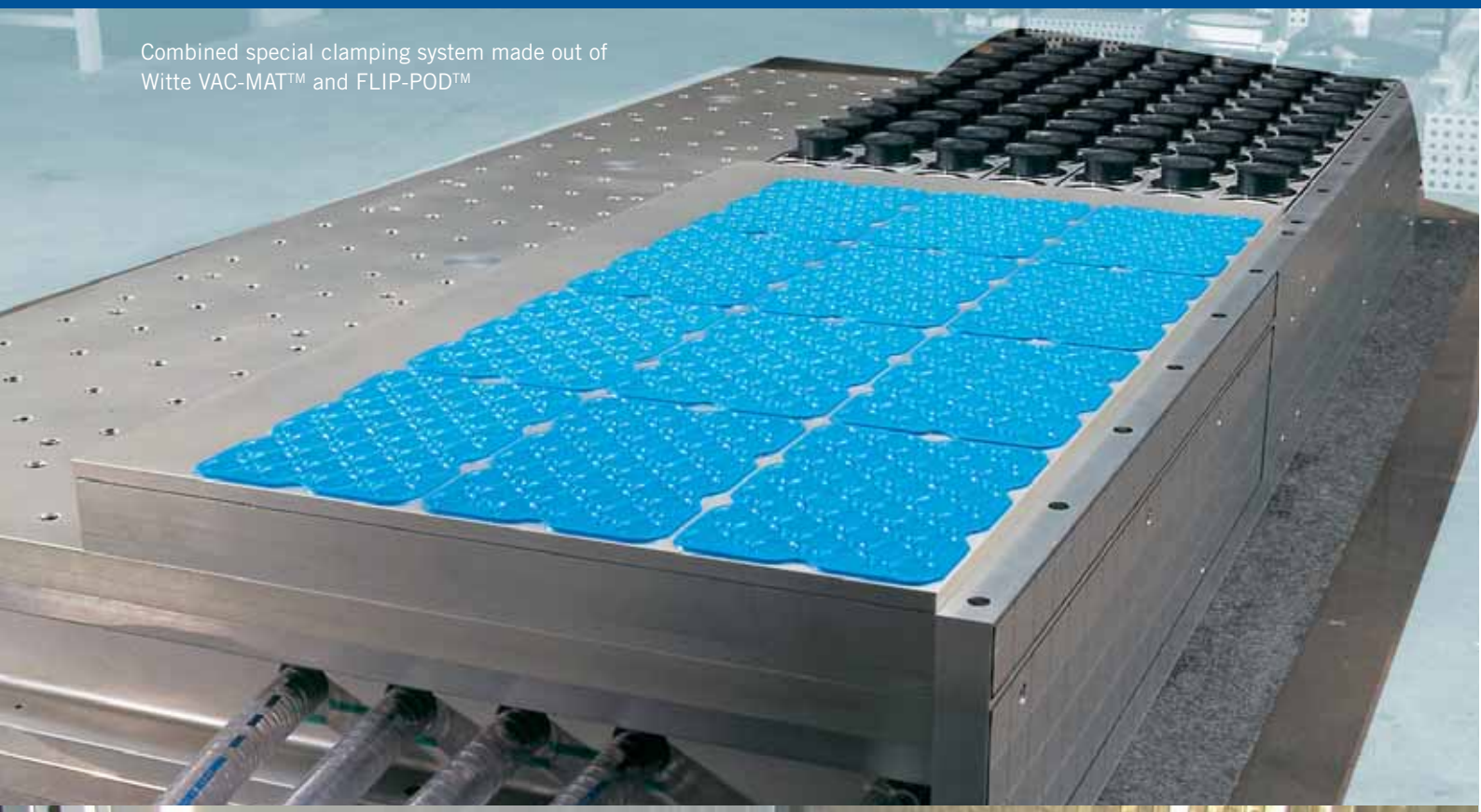

Combined special clamping system made out of Witte VAC-MAT™ and FLIP-POD™

Vacuum fixture with hydraulic components for machining steel parts

Clamping fixture for machining cylindrical
pre-formed ai craft fuselage parts (13m x 4,10m)
Parts are pressed down, rolled flat and clamped using vacuum
as well as pneumatic and hydraulic clamps

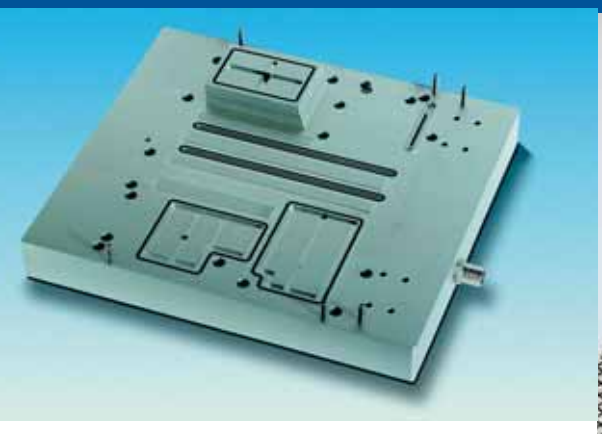

Vacuum chuck for clamping lap-top housings

Chuck for chip cards

Special designed automatic liquid separator for integration in custom built system

Circular chuck ø 1500 mm

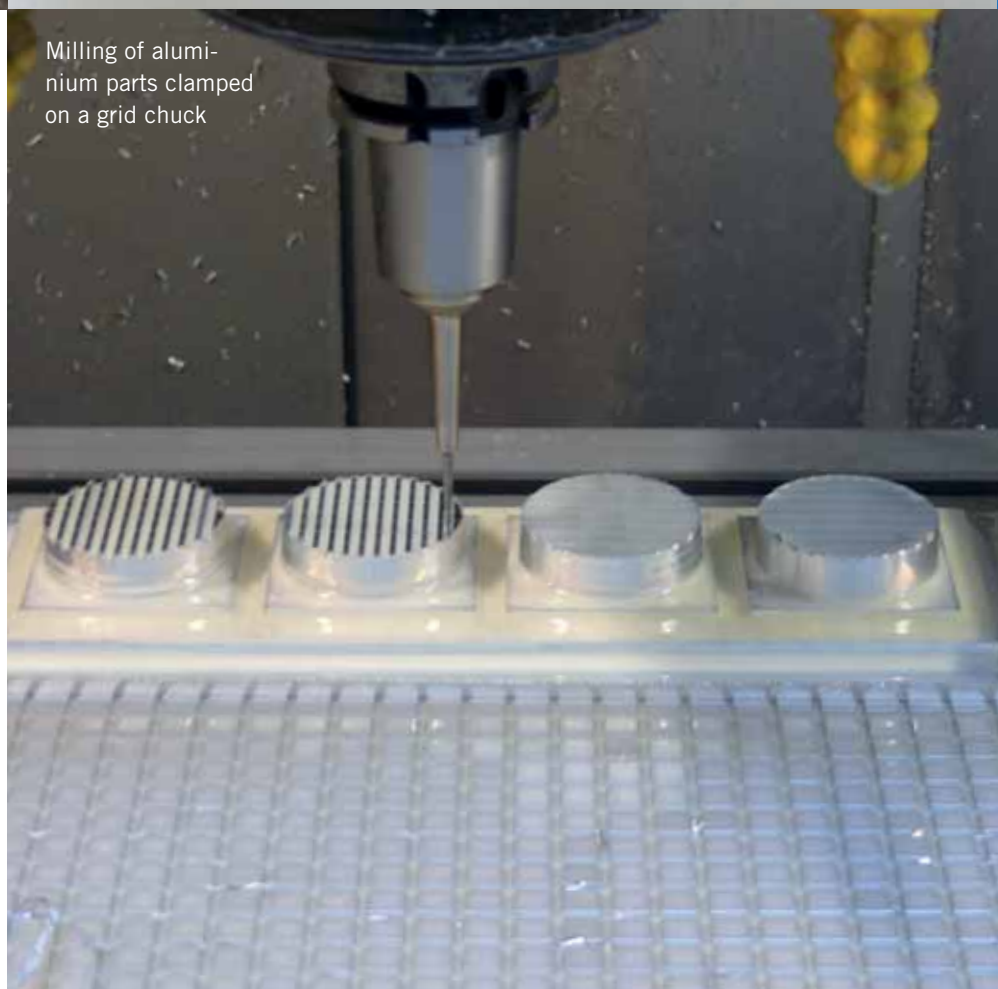

Milling of aluminium parts clamped on a grid chuck

Vacuum Fixture for drilling operation, approx. 4600mm long, with additional manually clamps.

Vacuum cube with integrated storage tank and distribution manifold, approx. 800 x 800 x 900 mm, used on machining centre with automatic 24 hour pallet exchange system. Parts held with vacuum during machining, transport and standing times.

Vacuum conversion table

%Vakuum	kPa	mbar	Torr	-kPa	-mmHg	-inHg
100	0	0	0	101,3	760	30
90	10	100	75	90	675	27
80	20	200	150	80	600	24
70	30	300	225	70	525	21
60	40	400	300	60	450	18
50	50	500	375	50	375	15
40	60	600	450	40	300	12
30	70	700	525	30	225	9
20	80	800	600	20	150	6
10	90	900	675	10	75	3
0	101,3	1013	760	0	0	0

Atmospheric pressure		
At sea level	0m	1013 mbar
On the Zugspitze	2963m	695 mbar
On Mount Everest	8848m	330 mbar

Formula for determing holding forces

The pressure P is the result of the ratio to force F and area A

F= P x A = N

Example:

Vacuum chuck 40 x 60 cm;
Vacuum unit with under pressure of 85% vacuum.
Whereby
P = 0,85 bar = 0,85 N/cm²
A = 40cmx60cm = 2400 cm²
F = 0,85 N/cm2 x 2400 cm²
= 2040 N

Units:
P= N/cm²
F = N
A = cm²

Additional holes in modular chucks

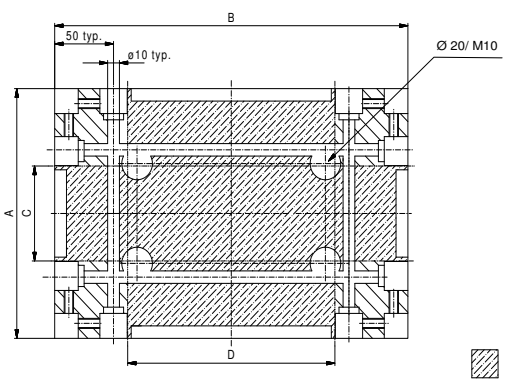

Nr.	A	B	C	D
81759	200	300	76	176
82837	300	400	175	275
82825	400	600	275	475

Drilling only possible in this area

Friction coefficients

and their influence on vacuum clamping technology

Material	Grip μ_0		Friction μ	
	dry	lubricated	dry	lubricated
Steel/Steel	0,15	0,1	0,1	0,07
Steel/Casting	0,25	0,1	0,2	0,08
Steel/Brakepad	–	–	0,5-0,6	0,2-0,5
Steel/Polyamide	–	–	0,32-0,45	0,1
Steel/Ice	0,027	–	0,014	–
Wood/Wood	0,4-0,6	0,2	0,2-0,4	0,1
Wood/Metal	0,6-0,7	0,1	0,4-0,5	0,1
Rubber/Asphalt	0,7-1,0 (>1,0)	–	0,5-0,6	–

The higher the number, the higher the resistance is against the work piece moving when clamping with vacuum. This resistance is reduced when water, coolant or oil is involved. Depending on the two materials involved up to 5 times as much. For instance steel on steel has a friction coefficient of 0,15. The value drops to 0,7 when using fluids.This shows clearly how clamping forces can be negatively affected when coolants are involved.

Index

Accessories 84
Additional vacuum tank 77
Air filter element 75, 92
BF100 AL 36, 99
CE100 White 35, 100
Circular grid chucks 23
Circular vacuum chuck 33
Clamping with vacuum 8
Connection unit 88
Content 1
Distributor block 59, 61
DLC light transmitting chuck 40, 42
Double nipple 93
End stop 15
FLIP-POD 48
FLIP-POD Set 52
Flourescent chuck 39
Foot switch 89
FP Basic unit 50
FP Center hole gasket 51
FP Filter 50
FP Half Pod 53
FP Lift ring 53
FP Locator POD 54
FP Polymer Ball 50
FP Seal 50
FP Sucker seal 51
FP-Transfer Pod 53
Freeze clamp technology 102, 103
Friction Booster 37
Grid chucks 16, 18, 19, 20, 21
HD 210 AL 36, 100
Hose connector 14
Hose nozzles 94
ICE-VICE 102, 103
Independent vacuum chuck 39
Liquid ring vacuum pump 74, 75
Liquid separator 78, 79
LM70 104
Maintenance and service kits 77
Manifold distributors 87
MC100 White 35, 99
Measuring processes 58, 60
Metapor 35, 96, 97
Metapor chuck 101
MiniVac 60
Modular vacuum unit 72, 73
O-shaped seal 18, 86
Perforated grid chucks 44, 45
Plug 15, 94
Quick coupling 94
Reducer 93
Replacement materials 84
Rotation joint 33, 88
Screw hose connection 92, 93
Seal 15, 92
Seal kit 91
Sintermetal 37
Sintermetal Vacuum chuck 37, 43
Slide valve 89
Slot vacuum chucks 24, 25, 26, 27, 28, 32
Slot vacuum chucks and rubber adapter mat 28, 30, 31
Spiral suction hose 59, 61, 95
Stand filter 79
Starter-Set 12, 80, 81, 82, 83
Suckers 59, 61
Tool for setting up 15
U tank 70
VAC-MAT 10, 11, 12, 14
VacMat adapter plate 19, 31
Vacuum Base 62
Vacuum chuck adapter 14
Vacuum chucks 6, 7, 8
Vacuum chucks for 3D parts 43, 56, 57
Vacuum clamping systems 58, 60
Vacuum electro-magnetic valves 90, 91
Vacuum gauges 86
Vacuum grease 86
Vacuum hand valve 89
Vacuum polymer tubing 95
Vacuum pump 59, 68, 69
Vacuum supply 64
Vacuum Switch 85
Vacuum unit 70, 71
Vakuum-Workstation 76
Vilmill 45, 46
Water filter 75
Weiguss 104, 105
Weiguss mould clamping technology 104
Y distributor 87
µ-porous Vacuum chucks 34, 38, 40, 42

Information:

Weights mentioned in the catalogue are non-committal and approximate, and can deviate considerably i.e. through technical changes.

- We reserve the right to make technical changes.
- Where differences between photos and parts lists exist, the parts lists are decisive.
- Due to fluctuations of copper content in aluminum - alloy colour deviations may occur during anodizing.

All details on our products in this catalogue, especially illustrations, drawings, dimensions and statements on performance are to be regarded as approximate average values. We reserve the right to change design, technical data, dimensions and weights.

The indicated standards, similar technical regulations as well as technical details, descriptions and illustrations are valid at time of printing. Our general trading conditions are valid. Our quotations are decisive.

Witte –
specialists for

Modular Fixturing Systems

Subcontracting

Vacuum Clamping Technology

Germany
Horst Witte Gerätebau
Barskamp KG
Horndorfer Weg 26-28
D-21354 Bleckede
Germany
Tel.: +49 (0) 58 54/89-0
Fax: +49 (0) 58 54/89-40

E-mail:
info@horst-witte.de
www.horst-witte.de

Asia
Witte Far East Pte Ltd
20 Boon Lay Way
01 – 170
Singapore 609967
Singapore
Tel.: +65-6248 5961
Fax: +65-6898 4542

E-mail: info@witteasia.com
rfq@witteasia.com
www.witteasia.com

USA & Canada
Witte LP
2220 Northmont Pkwy, Suite 250
Duluth, Georgia 30096
USA
Phone: +1 (770) 982 99 32
Fax: +1 (770) 982 99 28

E-mail:
info@witteamerica.com
rfq@witteamerica.com
www.witteamerica.com

Mexico
Horst Witte de Mexico
S.A. de C.V.
Linco SC
2 Sur 1706, Col. El Carmen
Puebla, 72000
Mexico
Phone:
+52 222893-8210

E-mail: esanchez@linco.com.mx
www.wittemexico.de

17792 - english vacuum catalogue 03/14